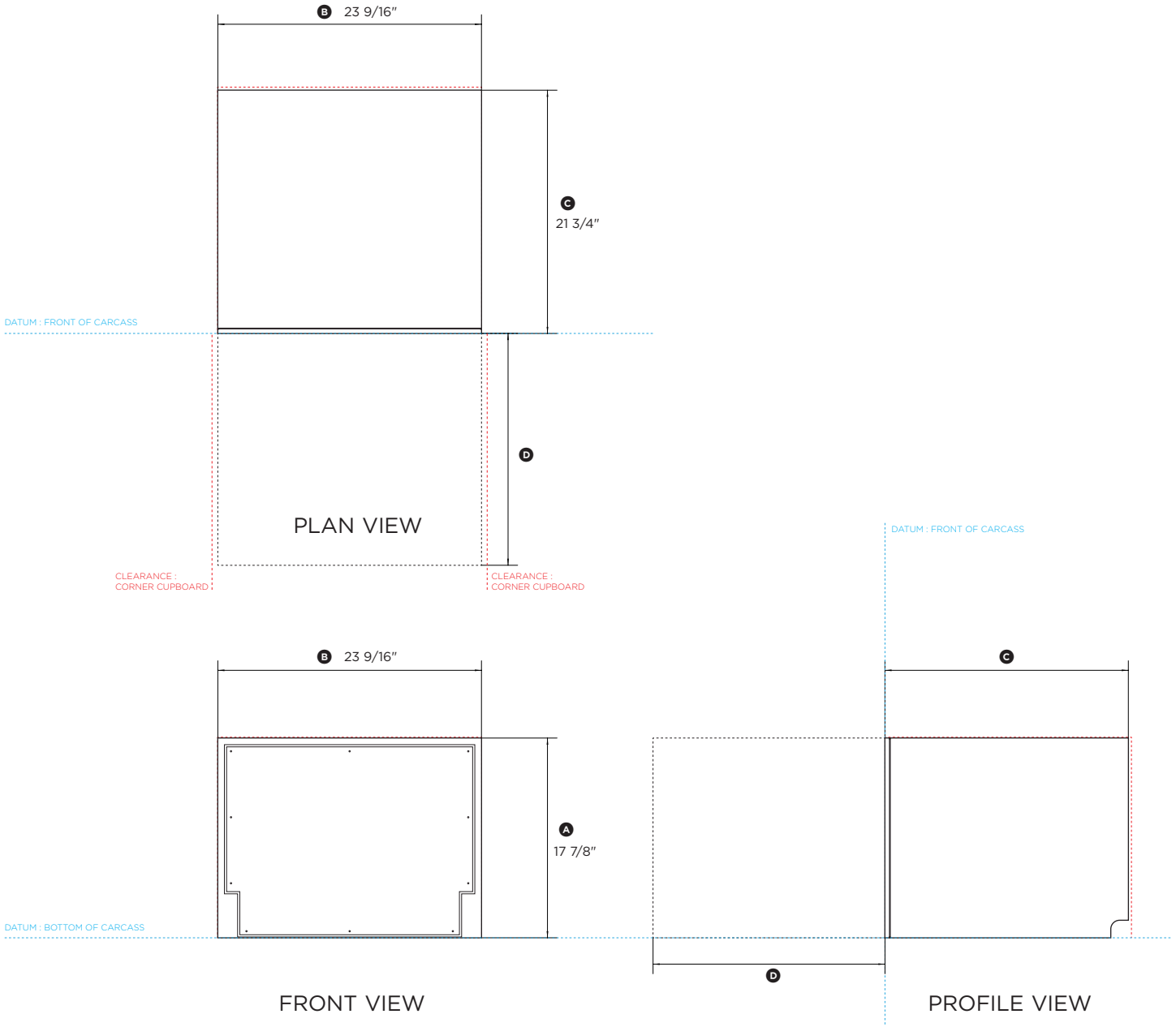


# FISHER & PAYKEL

**DATA SHEET**
**24″ Single DishDrawer™ Panel Ready Tall**

Model no:
**DD24STI9_N**
**DD24SHTI9 _N**
(refer page 3 for metric measurements)

| **Product Dimensions** | **in** |
|---|---|
| Ⓐ Overall height* of DishDrawer™ | 17 7/8″ |
| Ⓑ Overall width* of DishDrawer™ | 23 9/16″ |
| Ⓒ Depth of DishDrawer™ chassis* | 21 3/4″ |
| Ⓓ Depth of drawer (open) (measured from front datum)* | 20 3/4″ |

* Does not include the custom drawer panel or handle to be manufactured and fitted by cabinetmaker.

Note: Service outlet at rear extends both sides, hoses and cords can be routed to either or both.

| **Minimum Clearances** | **in** |
|---|---|
| Minimum inside height of cavity from bottom datum** | 18″ |
| Minimum inside width of cavity | 23 5/8″ |
| Minimum inside depth of cavity from front datum | 22 1/16″ |
| Minimum height of ventilation gap under custom drawer panel with external venting kit installed | 1/16″ |
| Minimum gap from top of custom drawer panel to bottom of benchtop | 1/16″ |
| Minimum clearance from a corner cupboard | 1/2″ |

** This Dishdrawer™ has also been designed to fit a 18 7/8″ high cavity. For full details please refer to the installation manual.

NOTE: If using External Venting Kit and venting into the toekick area, a minimum toekick height of 4″ is required to prevent pooling of condensation.

INDICATES CABINETRY / PRODUCT DATUM ----------
INDICATES CABINETRY CLEARANCES ----------

DATE: **28.05.2018**

IMPORTANT NOTE: Throughout this guide, dimensions may vary by ±2mm (1/16″). Please read the installation manual for detailed information on installing the product. For full installation instructions & specifications visit fisherpaykel.com

## 18” CAVITY HEIGHT

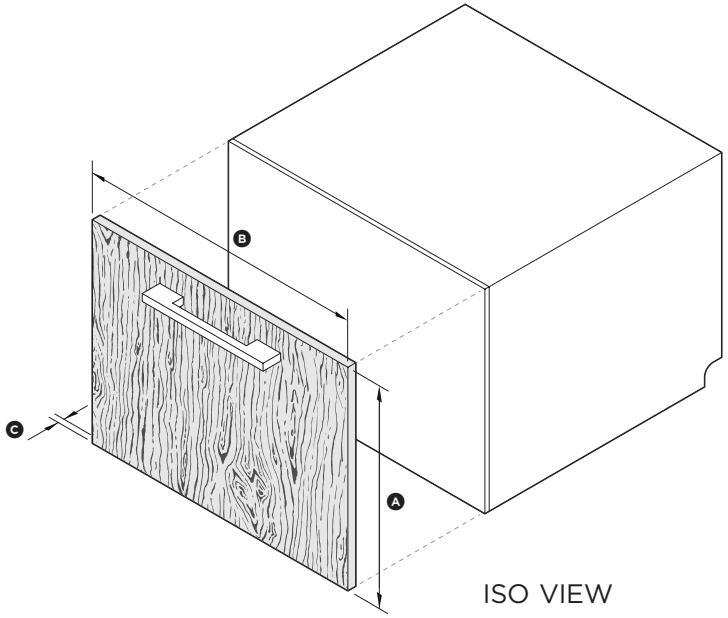


ISO VIEW

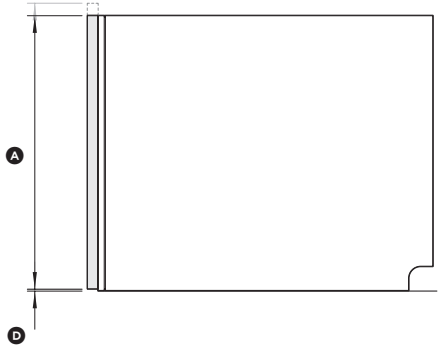


PROFILE VIEW

# FISHER & PAYKEL

**CUSTOM PANEL PREPARATION**
**24" Single DishDrawer™ Panel Ready Tall**

Model no:
**DD24STI9_N**
**DD24SHTI9_N**
(refer page 4 for metric measurements)

| **Dimensions** | **in** |
|---|---|
| Ⓐ Minimum height of drawer panel* | 17 13/16” |
| Ⓑ Width of drawer panel | 23 7/16” - 24 3/16" |
| Ⓒ Depth of front panel | 5/8" - 13/16” |
| Ⓓ Minimum height of ventilation gap below front panel | 1/16” |
| Maximum weight of each drawer panel (including handle) | 20lb |

* For 18” cavity height and 1/16” ventilation gap below drawer panel with external venting kit installed.
Drawer panel may be extended upwards to fit taller cavity. See installation instructions for full clearance details.

NOTE: If using External Venting Kit and venting into the toekick area, a minimum toekick height of 4“ is required to prevent pooling of condensation.

## 18 7/8” CAVITY HEIGHT

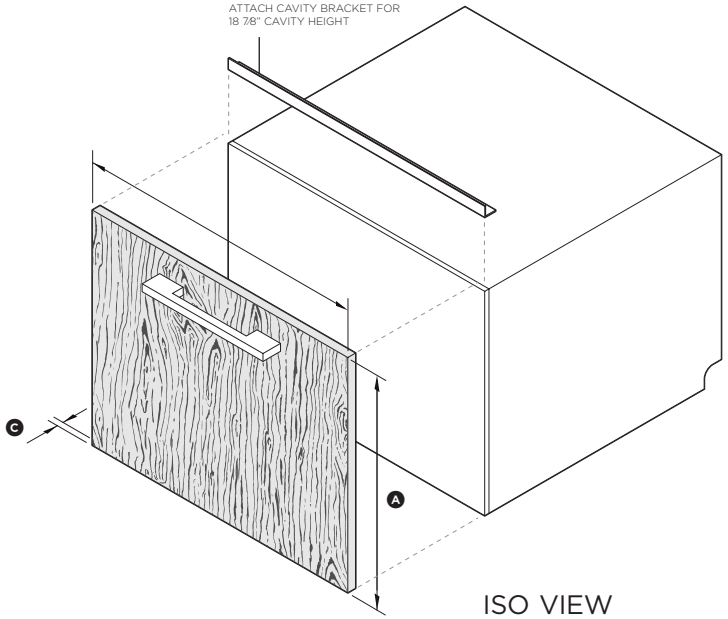


ISO VIEW

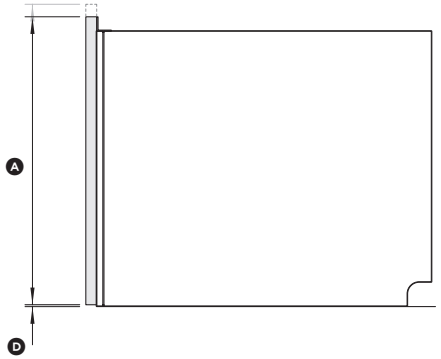


PROFILE VIEW

| **Dimensions** | **in** |
|---|---|
| Ⓐ Minimum height of drawer panel* | 18 3/4” |
| Ⓑ Width of drawer panel | 23 7/16” - 24 3/16" |
| Ⓒ Depth of front panel | 5/8" - 13/16” |
| Ⓓ Minimum height of ventilation gap below front panel | 1/16” |
| Maximum weight of each drawer panel (including handle) | 20lb |

* For 18 7/8” cavity height and 1/16” ventilation gap below drawer panel with external venting kit installed.
Drawer panel may be extended upwards to fit taller cavity. See installation instructions for full clearance details.

NOTE: If using External Venting Kit and venting into the toekick area, a minimum toekick height of 4“ is required to prevent pooling of condensation.

DATE: **28.05.2018**

IMPORTANT NOTE: Throughout this guide, dimensions may vary by ±2mm (1/16”). Please read the installation manual for detailed information on installing the product. For full installation instructions & specifications visit fisherpaykel.com

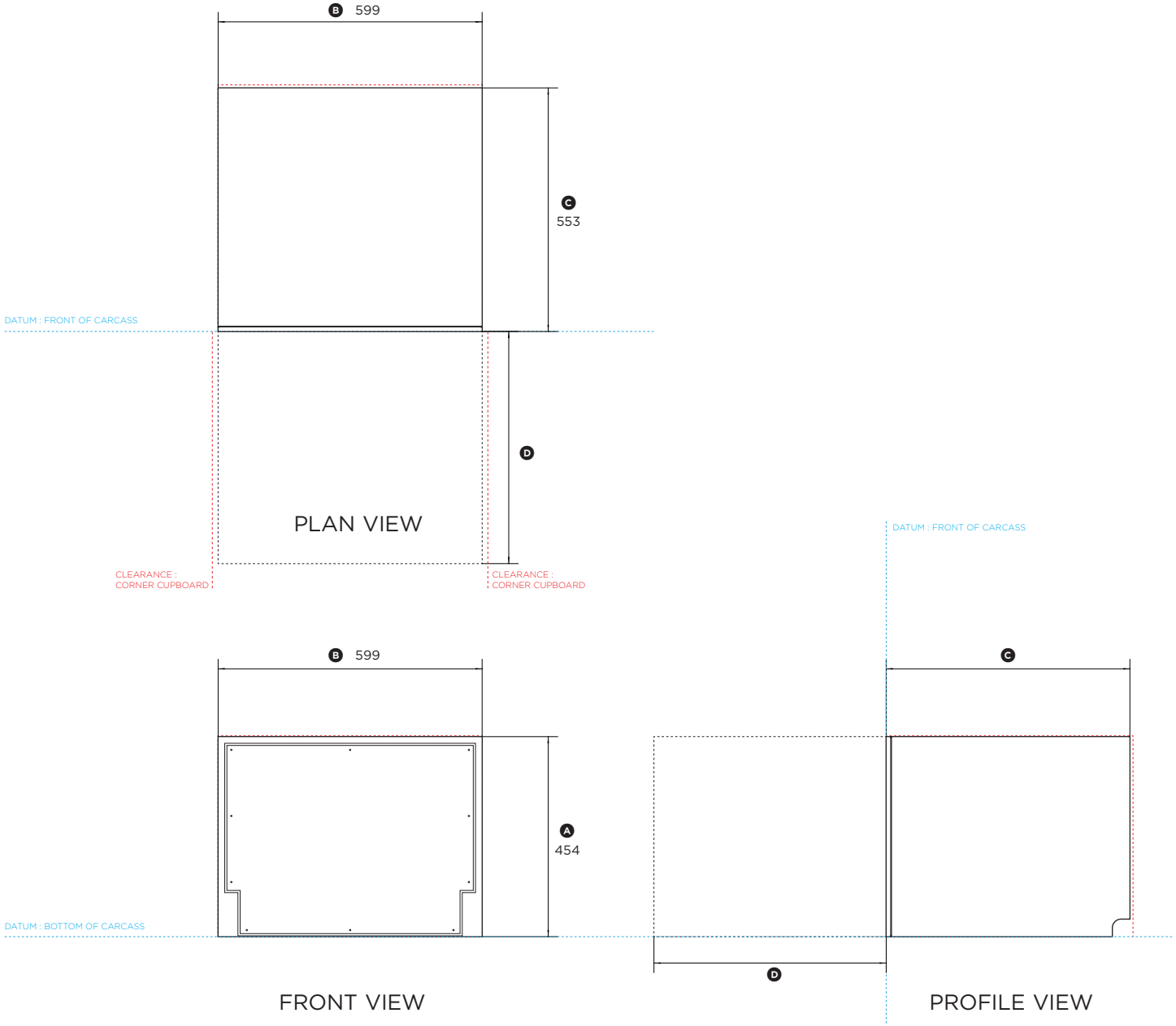


# FISHER & PAYKEL

**DATA SHEET**
**24" Single DishDrawer™ Panel Ready Tall**

Model no:
**DD24STI9_N**
**DD24SHTI9_N**
(refer page 1 for imperial measurements)

| **Product Dimensions** | **mm** |
|---|---|
| Ⓐ Overall height* of DishDrawer™ | 454 |
| Ⓑ Overall width* of DishDrawer™ | 599 |
| Ⓒ Depth of DishDrawer™ chassis* | 553 |
| Ⓓ Depth of drawer (open) (measured from front datum)* | 527 |

* Does not include the custom drawer panel or handle to be manufactured and fitted by cabinetmaker.

Note: Service outlet at rear extends both sides, hoses and cords can be routed to either or both.

| **Minimum Clearances** | **mm** |
|---|---|
| Minimum inside height of cavity from bottom datum** | 456 |
| Minimum inside width of cavity | 600 |
| Minimum inside depth of cavity from front datum | 560 |
| Minimum height of ventilation gap under custom drawer panel with external venting kit installed | 2 |
| Minimum gap from top of custom drawer panel to bottom of benchtop | 2 |
| Minimum clearance from a corner cupboard | 13 |

** This Dishdrawer™ has also been designed to fit a 480mm high cavity. For full details please refer to the installation manual.

NOTE: If using External Venting Kit and venting into the toekick area, a minimum toekick height of 100mm is required to prevent pooling of condensation.

INDICATES CABINETRY / PRODUCT DATUM ----------
INDICATES CABINETRY CLEARANCES ----------

DATE: **28.05.2018**

IMPORTANT NOTE: Throughout this guide, dimensions may vary by ±2mm (1/16"). Please read the installation manual for detailed information on installing the product. For full installation instructions & specifications visit fisherpaykel.com

# FISHER & PAYKEL

**CUSTOM PANEL PREPARATION**
**24" Single DishDrawer™ Panel Ready Tall**

## 456mm CAVITY HEIGHT

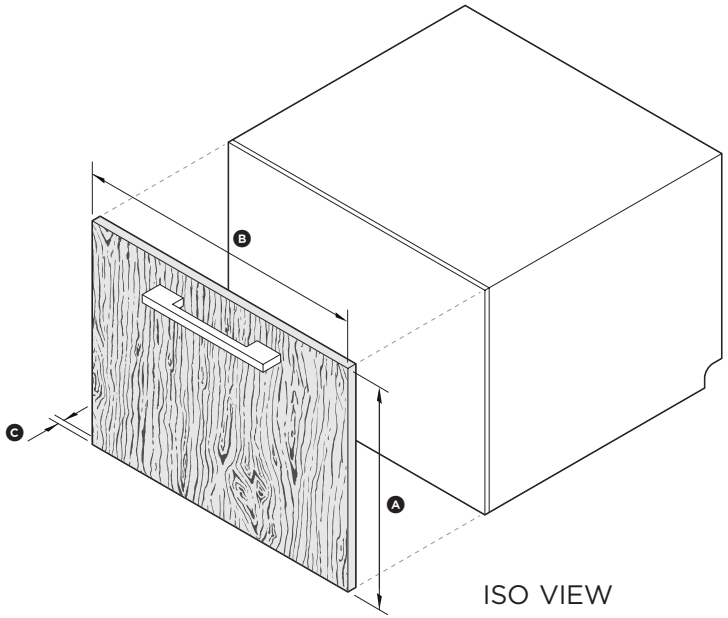


ISO VIEW

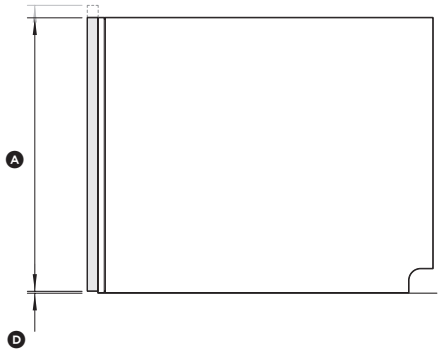


PROFILE VIEW

Model no:
**DD24STI9_N**
**DD24SHTI9_N**
(refer page 2 for imperial measurements)

| **Dimensions** | **mm** |
|---|---|
| Ⓐ Minimum height of drawer panel* | 452 |
| Ⓑ Width of drawer panel | 596 - 615 |
| Ⓒ Depth of front panel | 16-20 |
| Ⓓ Minimum height of ventilation gap below front panel | 2 |
| Maximum weight of each drawer panel (including handle) | 9 kg |

* For 456mm cavity height and 2mm ventilation gap below drawer panel with external venting kit installed.
Drawer panel may be extended upwards to fit taller cavity. See installation instructions for full clearance details.

NOTE: If using External Venting Kit and venting into the toekick area, a minimum toekick height of 100mm is required to prevent pooling of condensation.

## 480mm CAVITY HEIGHT

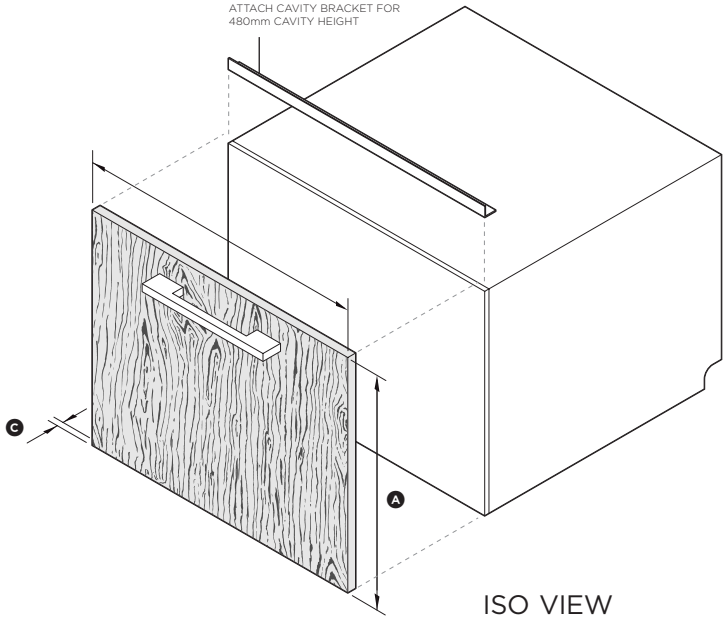


ISO VIEW

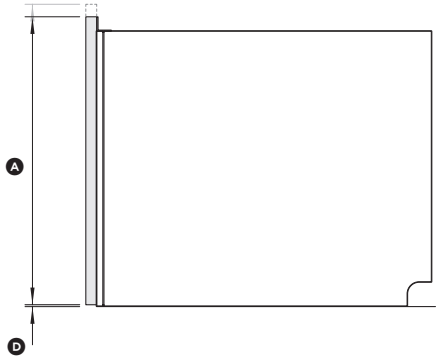


PROFILE VIEW

| **Dimensions** | **mm** |
|---|---|
| Ⓐ Minimum height of drawer panel* | 476 |
| Ⓑ Width of drawer panel | 596 - 615 |
| Ⓒ Depth of front panel | 16-20 |
| Ⓓ Minimum height of ventilation gap below front panel | 2 |
| Maximum weight of each drawer panel (including handle) | 9 kg |

* For 480mm cavity height and 2mm ventilation gap below drawer panel with external venting kit installed.
Drawer panel may be extended upwards to fit taller cavity. See installation instructions for full clearance details.

NOTE: If using External Venting Kit and venting into the toekick area, a minimum toekick height of 100mm is required to prevent pooling of condensation.

DATE: **28.05.2018**

IMPORTANT NOTE: Throughout this guide, dimensions may vary by ±2mm (1/16"). Please read the installation manual for detailed information on installing the product. For full installation instructions & specifications visit fisherpaykel.com