FISHER & PAYKEL

DATA SHEET
Warmer Drawer, 30" - Minimal style

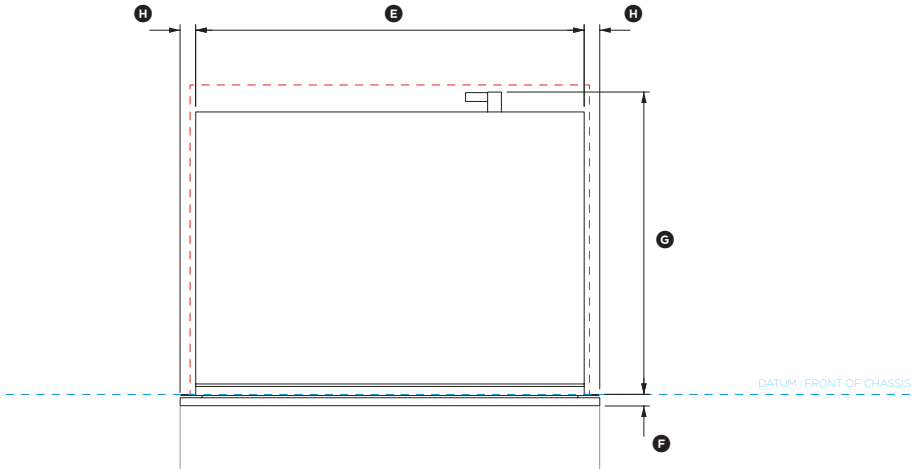

PLAN VIEW

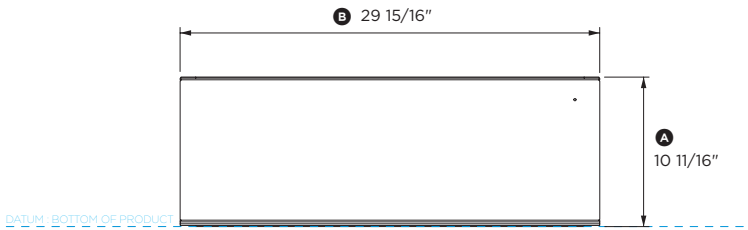

FRONT VIEW

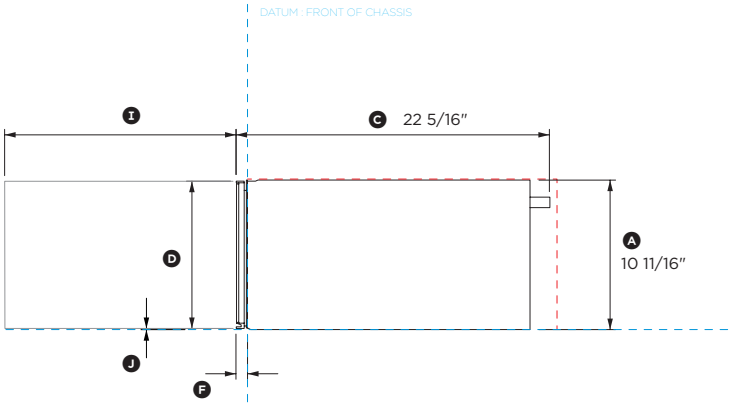

PROFILE VIEW

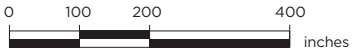

Model no:
WB30SDEB2
(refer page 2 for metric measurements)

Product Dimensions	**in**
Ⓐ Overall height of warmer drawer	10 11/16"
Ⓑ Overall width of warmer drawer	29 15/16"
Ⓒ Overall depth of drawer (includes front panel & power plug)	22 5/16"
Ⓓ Height of drawer front panel	10 1/2"
Ⓔ Width of chassis	27 13/16"
Ⓕ Depth of drawer front panel and flange	13/16"
Ⓖ Depth of chassis (includes power plug, excludes flange)	21 9/16"
Ⓗ Distance from side of chassis to side of drawer front	1 1/16"
Ⓘ Depth of open drawer (measured from front of drawer panel)	16 1/2"
Ⓙ Height from bottom of chassis to bottom of front panel	1/16"

Clearance Dimensions	**in**
Minimum inside height of cavity	10 3/4"
Minimum inside width of cavity	28 1/2"
Minimum inside depth of cavity	22 1/16"
Overall width of cabinetry	30 1/16"
Minimum clearance between top of front panel and upper cabinetry panel	1/8"
Minimum clearance between bottom of front panel and lower cabinetry panel	1/16"

INDICATES CABINETRY / PRODUCT DATUM ----------
INDICATES CABINETRY CLEARANCES ----------

DATE: **07.04.2021**

IMPORTANT NOTE: Throughout this guide, dimensions may vary by ±2mm (1/16"). Please read the installation manual for detailed information on installing the product. For full installation instructions & specifications visit fisherpaykel.com

FISHER & PAYKEL

DATA SHEET
Warmer Drawer, 30" - Minimal style

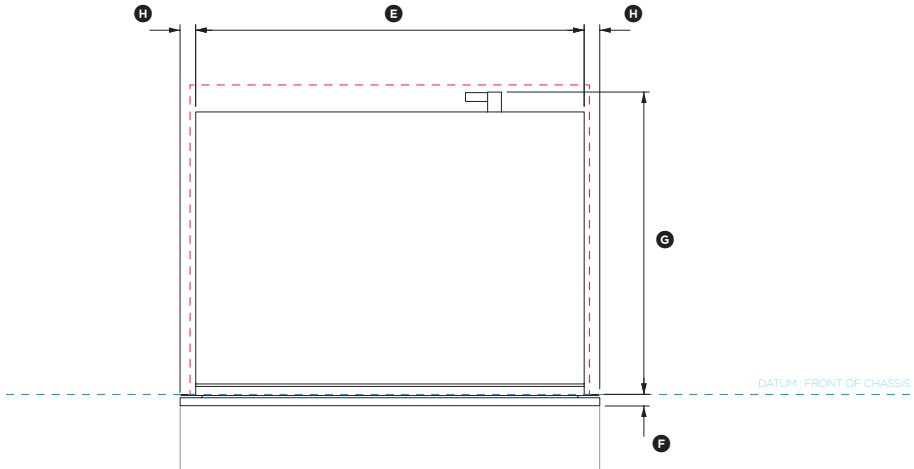

PLAN VIEW

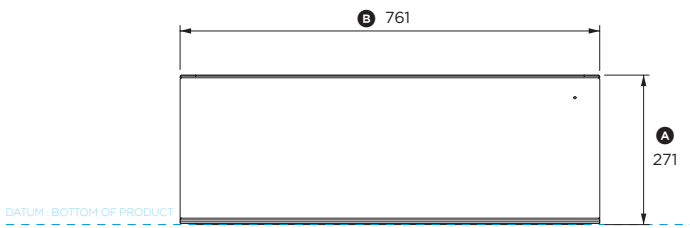

FRONT VIEW

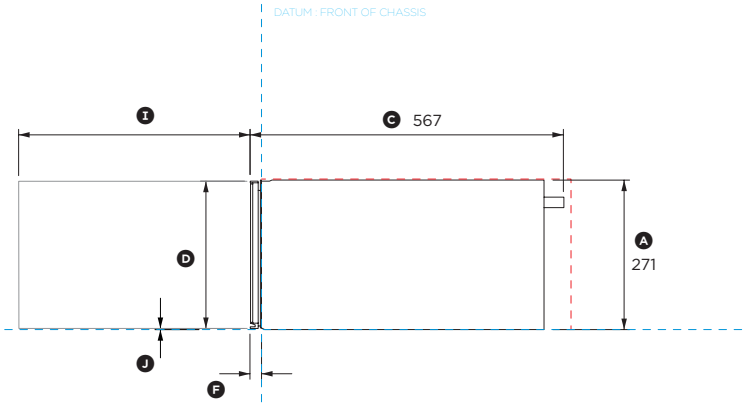

PROFILE VIEW

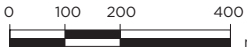

Model no:
WB30SDEB2
(refer page 1 for imperial measurements)

Product Dimensions	**mm**
(A) Overall height of warmer drawer	271
(B) Overall width of warmer drawer	761
(C) Overall depth of drawer (incl. front panel & power plug)	567
(D) Height of drawer front panel	267
(E) Width of chassis	707
(F) Depth of drawer front panel and flange	20
(G) Depth of chassis (incl. power plug)	547
(H) Distance from side of chassis to side of drawer front	27
(I) Depth of open drawer (measured from front of drawer panel)	419
(J) Height from bottom of chassis to bottom of front panel	2

Clearance Dimensions	**mm**
Minimum inside height of cavity	273
Minimum inside width of cavity	724
Minimum inside depth of cavity	560
Overall width of cabinetry	764
Minimum clearance between top of front panel and upper cabinetry panel	3
Minimum clearance between bottom of front panel and lower cabinetry panel	2

INDICATES CABINETRY / PRODUCT DATUM ----------
INDICATES CABINETRY CLEARANCES ----------

DATE: **07.04.2021**

IMPORTANT NOTE: Throughout this guide, dimensions may vary by ±2mm (1/16"). Please read the installation manual for detailed information on installing the product. For full installation instructions & specifications visit fisherpaykel.com