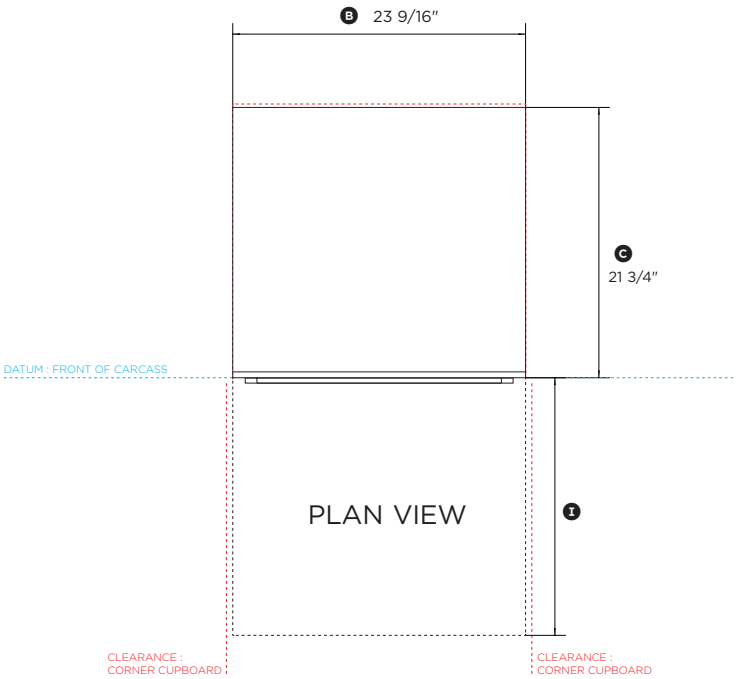

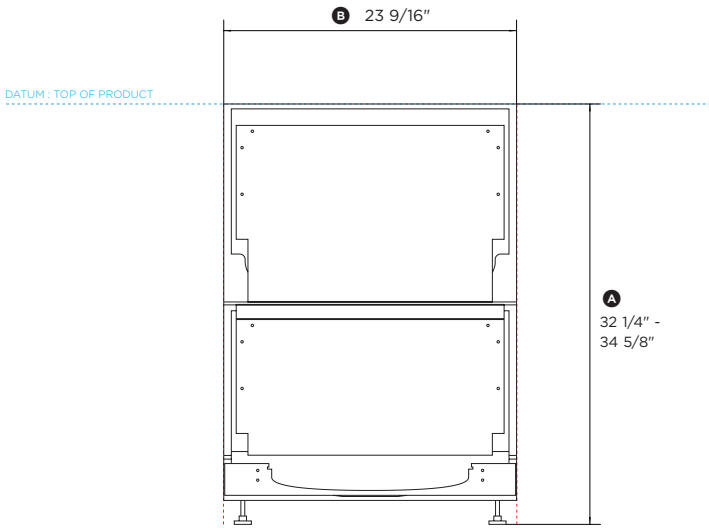

FRONT VIEW

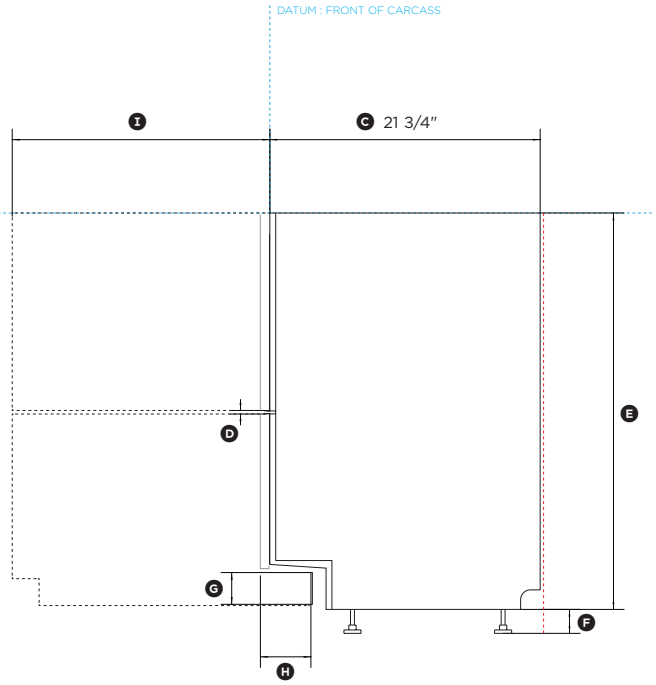

PROFILE VIEW

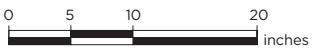

FISHER & PAYKEL

DATA SHEET
24″ Double DishDrawer™ Panel Ready

Model no:
DD24DI9_N
(refer page 3 for metric measurements)

Product Dimensions	**in**
Ⓐ Overall height* of DishDrawer™	32 1/4″ - 34 5/8″
Ⓑ Overall width** of DishDrawer™	23 9/16″
Ⓒ Depth of DishDrawer™ chassis**	21 3/4″
Ⓓ Ventilation gap between custom panels	5/16″
Ⓔ Height of chassis at rear (not including mounted feet)	31 15/16″
Ⓕ Height of mounted feet (adjustable)	3/8″ - 2 3/4″
Ⓖ Height of toekick custom panel (adjustable)	2 1/4″ - 4 5/8″
Ⓗ Depth from front of drawer panel to front of toekick panel***(adjustable)	1 9/16″ - 3 15/16″
Ⓘ Depth of drawer (open) (measured from front datum)**	20 3/4″

* Includes adjustable mounted feet and the range of movement.

** Does not include the custom drawer panels, handles or toekick panel to be manufactured and fitted by cabinetmaker.

*** Assuming panel thickness of 11/16″. If the toekick depth is greater than 1 15/16″, the panel will need to be cut to clear the underside of the tub, please refer to the installation manual for more detail.

Note: Service outlet at rear extends both sides, hoses and cords can be routed to either or both.

Minimum Clearances	**in**
Minimum inside height of cavity from bottom datum	32 1/4″
Minimum inside width of cavity	23 5/8″
Minimum inside depth of cavity from front datum	22 1/16″
Minimum ventilation gap between custom panels	5/16″
Minimum clearance from underside of bench to top of custom panel	1/16″
Minimum clearance from bottom of toekick panel to floor	1/2″
Minimum clearance from a corner cupboard	1/2″

INDICATES CABINETRY / PRODUCT DATUM ----------
INDICATES CABINETRY CLEARANCES ----------

DATE: **28.05.2018**

IMPORTANT NOTE: Throughout this guide, dimensions may vary by ±2mm (1/16″). Please read the installation manual for detailed information on installing the product. For full installation instructions & specifications visit fisherpaykel.com

FISHER & PAYKEL

CUSTOM PANEL PREPARATION
24" Double DishDrawer™ Panel Ready

Model no:
DD24DI9_N
(refer page 4 for metric measurements)

Dimensions	**in**
Ⓐ Minimum height of top drawer panel*	15 11/16"
Ⓑ Width of top drawer and bottom drawer panels	23 7/16" - 24 3/16"
Ⓒ Minimum height of bottom drawer panel*	12 1/4" - 14 13/16"
Ⓓ Height from floor to top of bottom drawer panel**	16 5/16" - 18 11/16"
Ⓔ Ventilation gap between top drawer panel and bottom drawer panel	5/16"
Ⓕ Height of toekick panel*	2 1/4" - 4 5/8"
Ⓖ Depth of custom panels	5/8" - 13/16"
Maximum weight of each drawer panel (including handle)	20lb

* The top drawer panel may be extended up, or the bottom panel down from the fixed gap between both. Adjust the height of the toekick panel accordingly.

** Depending on adjustment of leveling feet.

NOTE:
If the toekick depth is greater than 1 15/16", the panel will need to be cut to clear the underside of the tub, please refer to the installation manual and panel preparation downloads for more detail.

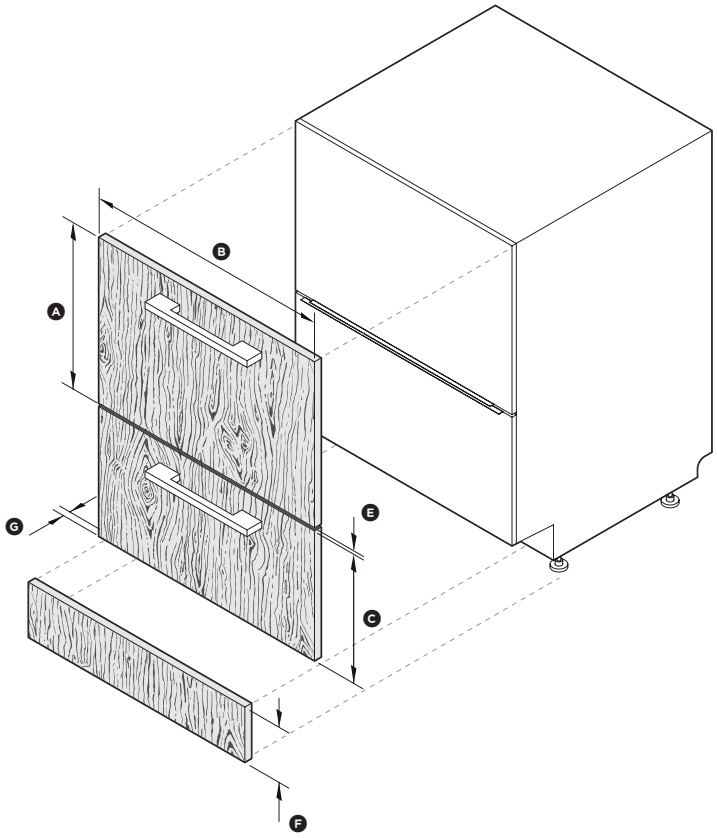

ISO VIEW

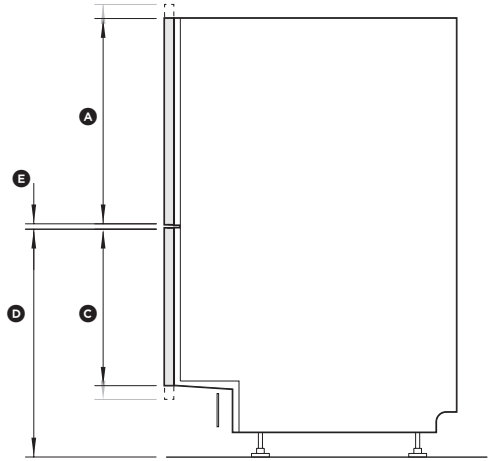

PROFILE VIEW

DATE: **28.05.2018**

IMPORTANT NOTE: Throughout this guide, dimensions may vary by ±2mm (1/16"). Please read the installation manual for detailed information on installing the product. For full installation instructions & specifications visit fisherpaykel.com

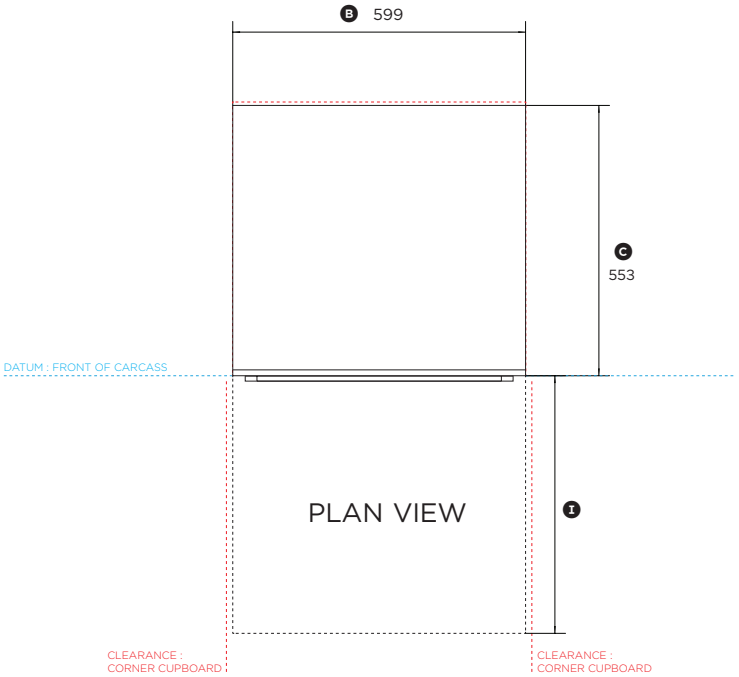

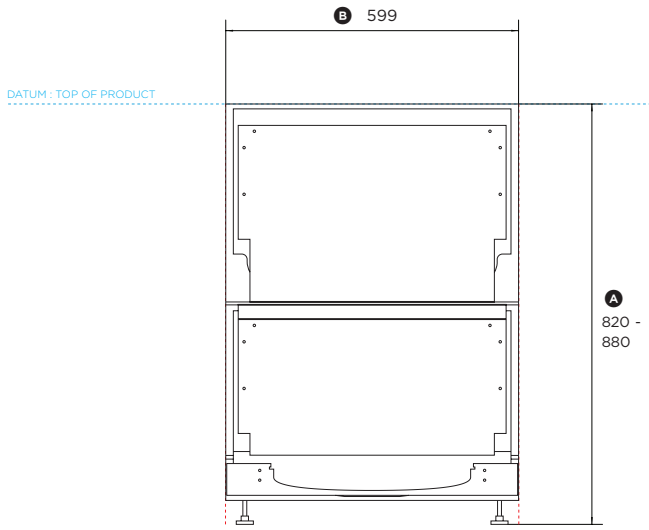

FRONT VIEW

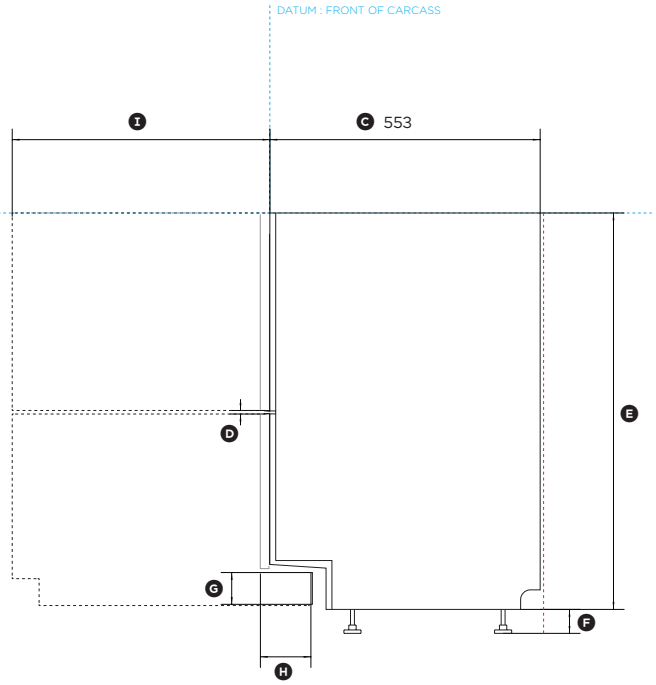

PROFILE VIEW



FISHER & PAYKEL

DATA SHEET
24" Double DishDrawer™ Panel Ready

Model no:
DD24DI9_N
(refer page 1 for imperial measurements)

Product Dimensions	**mm**
Ⓐ Overall height* of DishDrawer™	820 – 880
Ⓑ Overall width** of DishDrawer™	599
Ⓒ Depth of DishDrawer™ chassis**	553
Ⓓ Ventilation gap between custom panels	8
Ⓔ Height of chassis at rear (not including mounted feet)	811
Ⓕ Height of mounted feet (adjustable)	9 – 69
Ⓖ Height of toekick custom panel (adjustable)	58 – 118
Ⓗ Depth from front of drawer panel to front of toekick panel***(adjustable)	40 – 100
Ⓘ Depth of drawer (open) (measured from front datum)**	527

* Includes adjustable mounted feet and the range of movement.

** Does not include the custom drawer panels, handles or toekick panel to be manufactured and fitted by cabinetmaker.

*** Assuming panel thickness of 18mm. If the toekick depth is greater than 50mm, the panel will need to be cut to clear the underside of the tub, please refer to the installation manual for more detail.

Note: Service outlet at rear extends both sides, hoses and cords can be routed to either or both.

Minimum Clearances	**mm**
Minimum inside height of cavity from bottom datum	820
Minimum inside width of cavity	600
Minimum inside depth of cavity from front datum	560
Minimum ventilation gap between custom panels	8
Minimum clearance from underside of bench to top of custom panel	2
Minimum clearance from bottom of toekick panel to floor	12
Minimum clearance from a corner cupboard	13

INDICATES CABINETRY / PRODUCT DATUM ----------
INDICATES CABINETRY CLEARANCES ----------

DATE: **28.05.2018**

IMPORTANT NOTE: Throughout this guide, dimensions may vary by ±2mm (1/16"). Please read the installation manual for detailed information on installing the product. For full installation instructions & specifications visit fisherpaykel.com

FISHER & PAYKEL

CUSTOM PANEL PREPARATION
24" Double DishDrawer™ Panel Ready

Model no:
DD24DI9_N
(refer page 2 for imperial measurements)

Dimensions	**mm**
Ⓐ Minimum height of top drawer panel*	398
Ⓑ Width of top drawer and bottom drawer panels	596 - 615
Ⓒ Minimum height of bottom drawer panel*	311 - 360
Ⓓ Height from floor to top of bottom drawer panel**	414 - 474
Ⓔ Ventilation gap between top drawer panel and bottom drawer panel	8
Ⓕ Height of toekick panel*	58 - 118
Ⓖ Depth of custom panels	16 - 20

Maximum weight of each drawer panel (including handle)	9 kg

* The top drawer panel may be extended up, or the bottom panel down from the fixed gap between both. Adjust the height of the toekick panel accordingly.

** Depending on adjustment of leveling feet.

NOTE:
If the toekick depth is greater than 50mm, the panel will need to be cut to clear the underside of the tub, please refer to the installation manual and panel preparation downloads for more detail.

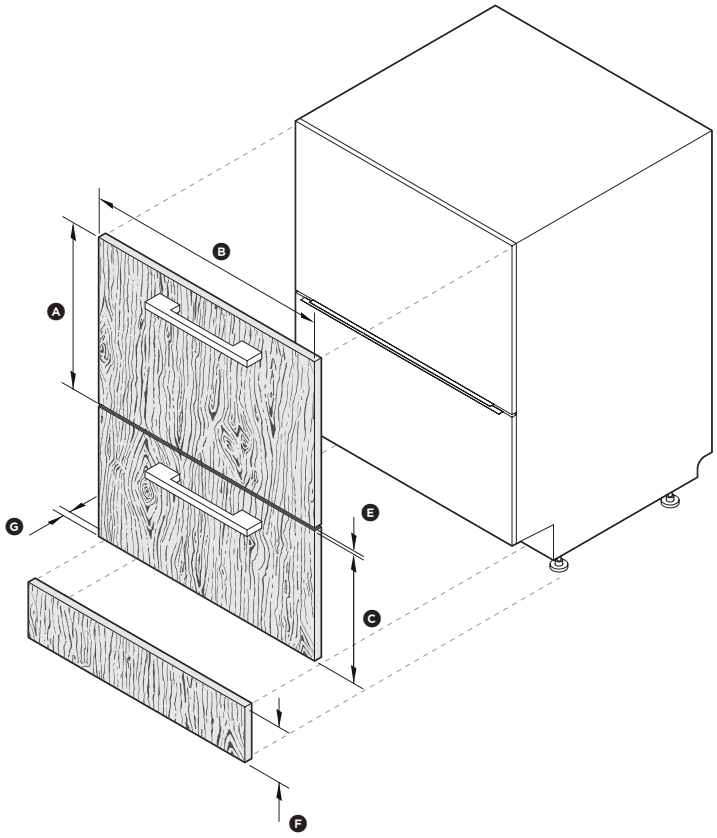

ISO VIEW

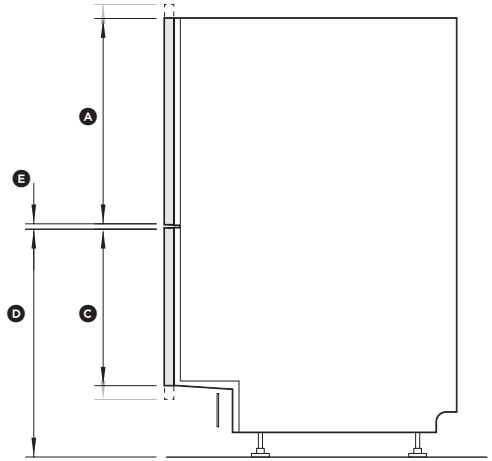

PROFILE VIEW

DATE: **28.05.2018**

IMPORTANT NOTE: Throughout this guide, dimensions may vary by ±2mm (1/16"). Please read the installation manual for detailed information on installing the product. For full installation instructions & specifications visit fisherpaykel.com