FISHER & PAYKEL

DATA SHEET
Vacuum Seal Drawer, 30" - Minimal style

Model no:
VB30SDEB1
(refer page 2 for metric measurements)

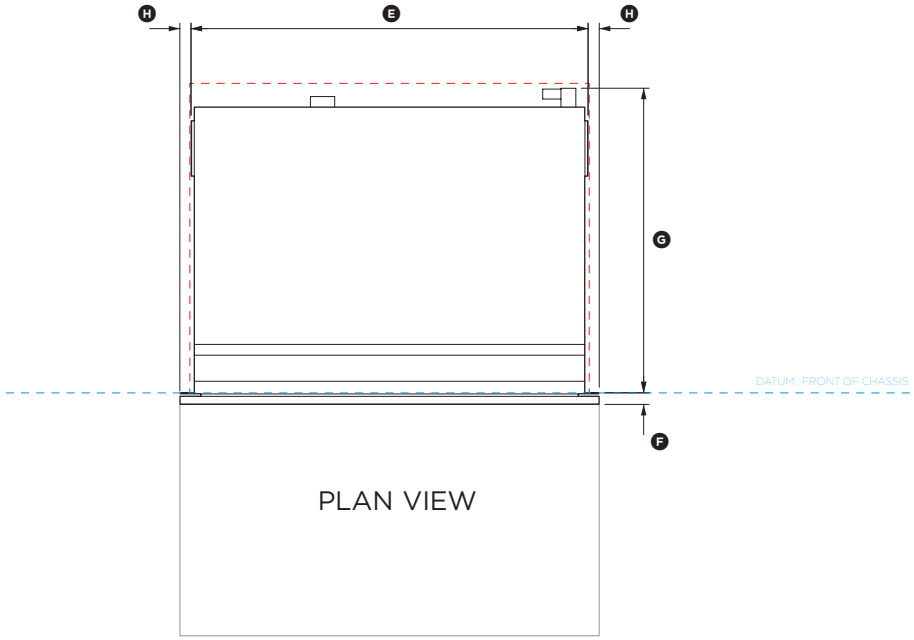

PLAN VIEW

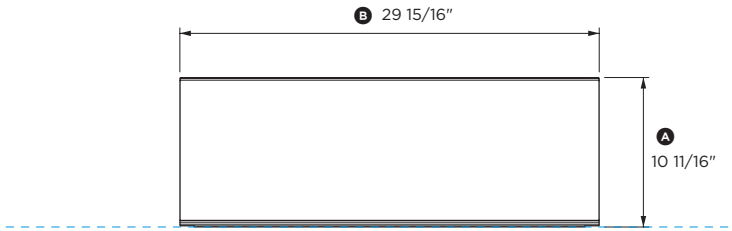

FRONT VIEW

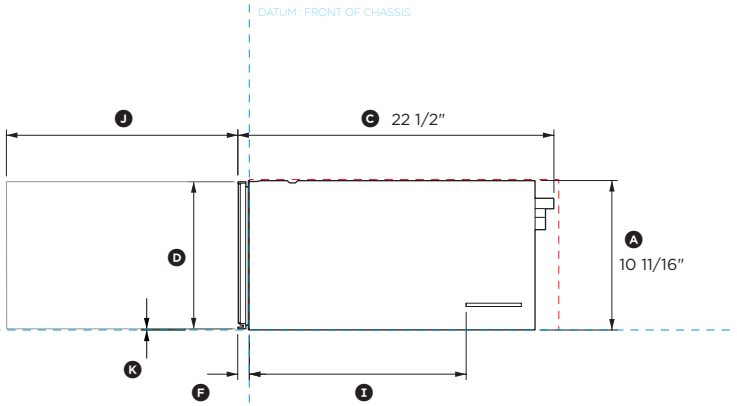

PROFILE VIEW

Product Dimensions	in
Ⓐ Overall height of vacuum drawer	10 11/16"
Ⓑ Overall width of vacuum drawer	29 15/16"
Ⓒ Overall depth of drawer (includes front panel & power plug)	22 1/2"
Ⓓ Height of drawer front panel	10 1/2"
Ⓔ Width of chassis (includes side brackets)	28 5/16"
Ⓕ Depth of drawer front panel and flange	13/16"
Ⓖ Depth of chassis (includes power plug, excludes flange)	21 11/16"
Ⓗ Distance from side bracket to side of drawer front	13/16"
Ⓘ Distance from rear of flange to side bracket	15 5/16"
Ⓙ Depth of open drawer (measured from front of drawer panel)	16 1/2"
Ⓚ Height from bottom of chassis to bottom of front panel	1/16"

Clearance Dimensions	in
Minimum inside height of cavity	10 3/4"
Minimum inside width of cavity	28 1/2"
Minimum inside depth of cavity	22 1/16"
Overall width of cabinetry	30 1/16"
Minimum clearance between top of front panel and upper cabinetry panel	1/8"
Minimum clearance between bottom of front panel and lower cabinetry panel	1/16"

INDICATES CABINETRY / PRODUCT DATUM ----------
INDICATES CABINETRY CLEARANCES ----------

DATE: **07.04.2021**

IMPORTANT NOTE: Throughout this guide, dimensions may vary by ±2mm (1/16"). Please read the installation manual for detailed information on installing the product. For full installation instructions & specifications visit fisherpaykel.com

0 100 200 400
inches

FISHER & PAYKEL

DATA SHEET
Vacuum Seal Drawer, 30" - Minimal style

Model no:
VB30SDEB1
(refer page 1 for imperial measurements)

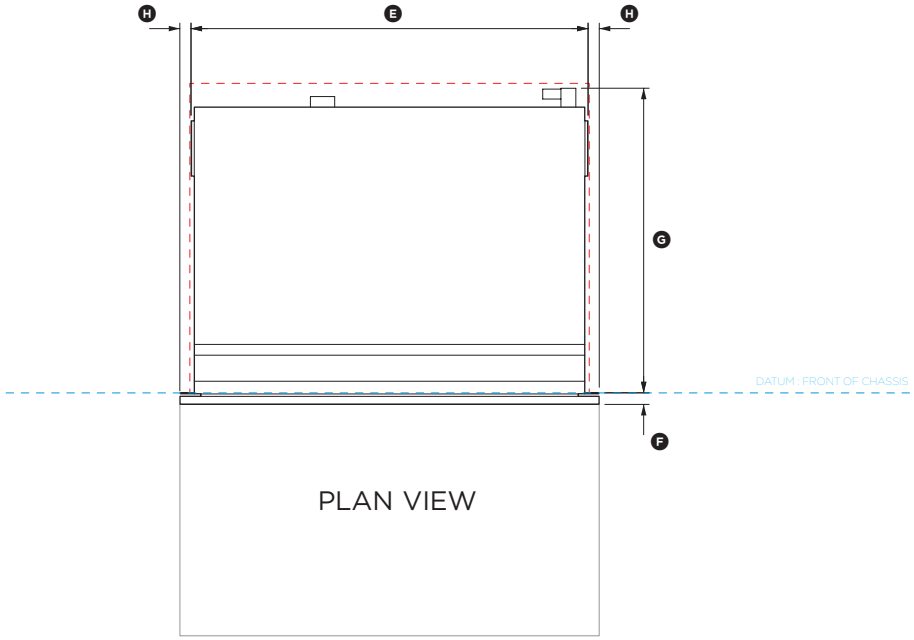

PLAN VIEW

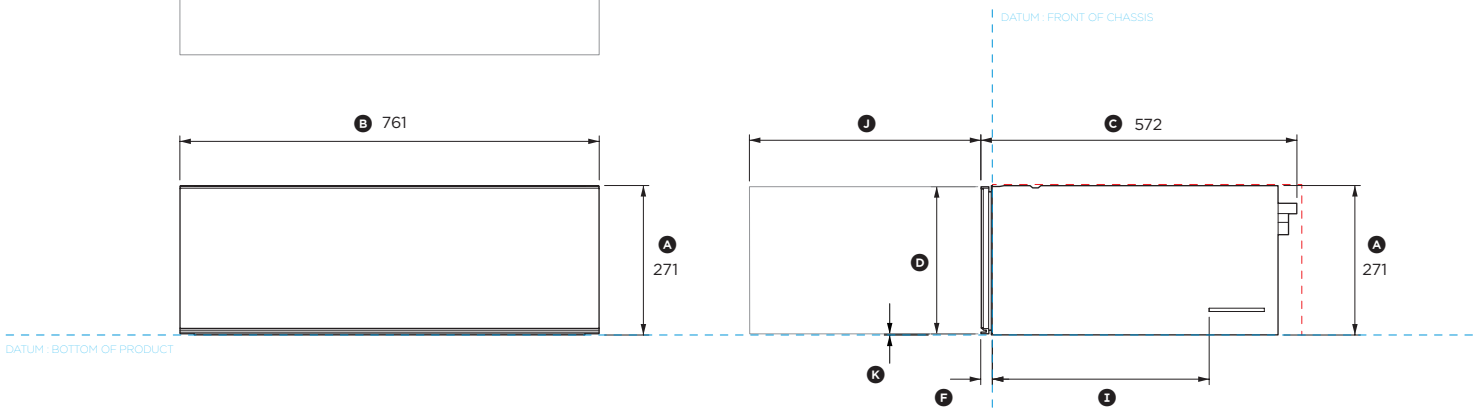

FRONT VIEW

PROFILE VIEW

Product Dimensions	mm
Ⓐ Overall height of vacuum drawer	271
Ⓑ Overall width of vacuum drawer	761
Ⓒ Overall depth of drawer (includes front panel & power plug)	571
Ⓓ Height of drawer front panel	267
Ⓔ Width of chassis (includes side brackets)	720
Ⓕ Depth of drawer front panel and flange	20
Ⓖ Depth of chassis (includes power plug, excludes flange)	551
Ⓗ Distance from side bracket to side of drawer front	20
Ⓘ Distance from rear of flange to side bracket	389
Ⓙ Depth of open drawer (measured from front of drawer panel)	419
Ⓚ Height from bottom of chassis to bottom of front panel	2

Clearance Dimensions	mm
Minimum inside height of cavity	273
Minimum inside width of cavity	724
Minimum inside depth of cavity	560
Overall width of cabinetry	764
Minimum clearance between top of front panel and upper cabinetry panel	3
Minimum clearance between bottom of front panel and lower cabinetry panel	2

0 100 200 400
millimetres

INDICATES CABINETRY / PRODUCT DATUM ----------
INDICATES CABINETRY CLEARANCES ----------

DATE: **07.04.2021**

IMPORTANT NOTE: Throughout this guide, dimensions may vary by ±2mm (1/16"). Please read the installation manual for detailed information on installing the product. For full installation instructions & specifications visit fisherpaykel.com