XOB42SC
WALL MOUNT HOOD

HOW BEAUTIFUL KITCHENS BREATHE





XOB42SC

- High-Velocity Blower
- Incomparable handcrafted Italian finish
- Electronic 3 speed illuminated controls
- 5 Minute delay function

DESIGNED AND CRAFTED IN ITALY

The Classic architectural lines that have inspired a revolution in modern hood design. Simple yet elegant, a timeless design that will endure in your kitchen for years to come. Quiet and efficient at an unbelievable price.

At XO, we believe that a good design is something everyone can afford

WORLD CLASS SERVICE | COMPREHENSIVE WARRANTIES

OUR LASTING COMMITMENT TO YOU

LOVE IT OR LEAVE IT
100% GUARANTEED

XOB42SC

WALL MOUNT HOOD

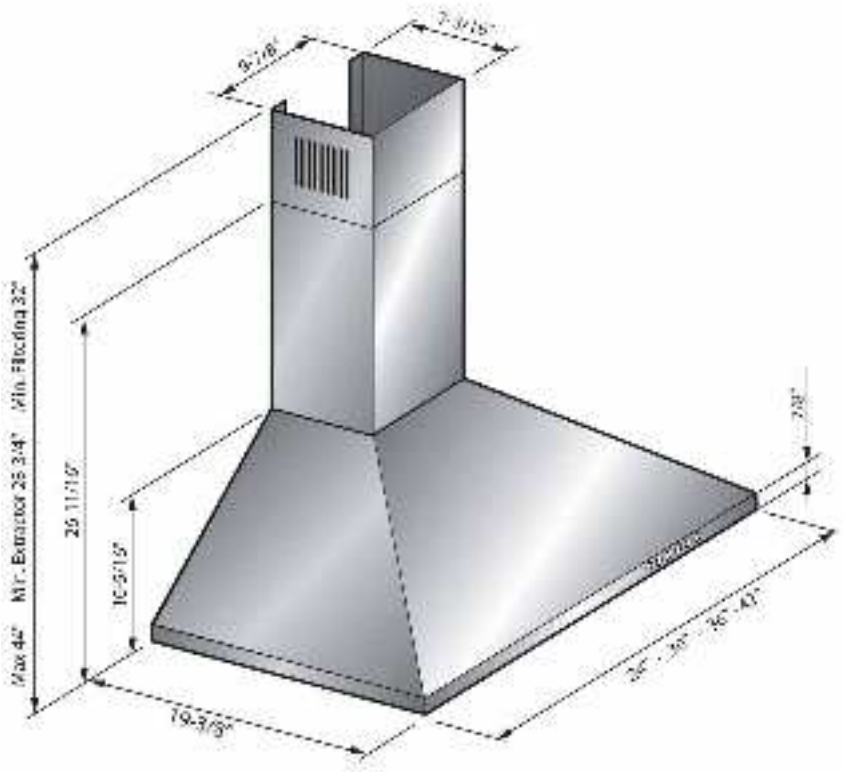

DESIGNED & CRAFTED IN ITALY

FEATURES

FINISH

Stainless Steel
Also available in Black and White

FEATURES

- Electronic 3 Speed Control + Power Boost
- CCC Code Compliance Control - 395 or 600 CFM
- High Efficiency 3000K LED lights (x2)
- High Velocity Blower optimally removes Smoke, Grease and Odors
- Dishwasher Safe Aluminum Mesh Filter
- 6” Vertical Duct or Recirculating (Kit Sold Separately)
- 5 Minute Delay Shutoff Timer
- Standard Chimney fits ceilings up to 9’ tall
- Made In Italy

PERFORMANCE

SPEED	1	2	3	BOOST
CFM	160	250	395	600
SONES	1.0	2.5	4.0	6.5

SPECIFICATIONS

ELECTRICAL 120 VAC 60HZ 3.6 AMP

DIMENSIONS

H MAX 44” - MIN 32” (Recirc)
MIN 28 3/4” (Vented)
W 24” - 30” - 36” - 42”
D 19-3/8”
(Refer to illustration above)

MOUNTING HEIGHT

ABOVE COOKING 27” - 32”

OPTIONS

Recirculation Kit	**XORFK04**
Recirculation Carbon Filter	**XORFRND**
6” Make-Up Air Kit	**XOMA06**
Extended Duct Cover (for ceilings up to 10” tall)	**XOEDCB2**

XO the next level in luxury appliances
xoappliance.com | 800.966.8300

UL LISTED

XO is exclusively distributed by
EASTERN MARKETING CORP.
24 Eisenhower Parkway
Roseland, NJ 07068

XOB42SC

WALL MOUNT HOOD

RECOMMENDED MOUNTING HEIGHT

All range hoods have a recommended range of installation height over the cooking surface. However cooking styles, types of cooking equipment and installation limitations can vary greatly. For installations outside the recommended range - consult XO.



THESE MODELS HAVE A 6" DIAMETER VERTICAL EXHAUST DUCT

RECIRCULATION

These XOB models may be installed with an optional recirculation kit when venting outside is not practical. When used in recirculation mode the filtered exhaust is directed back into the living space through vents in the telescoping duct cover. These vents cannot be covered in the installation.

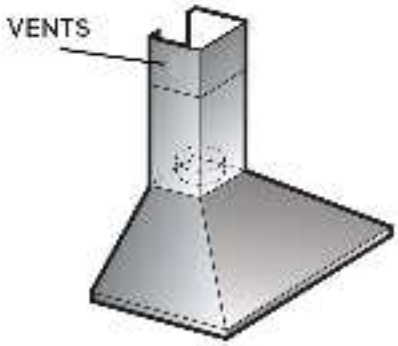

HOW DOES CODE COMPLIANCE CONTROL HELP -

CODE COMPLIANCE CONTROL (CCC) enables the installer to re-program the hood as it is being installed. Your XO Hood is set to operate at 600 CFM maximum at the factory.

Re-programing is accomplished quickly and requires no special tools or additional parts but once done, the air flow rate is limited to a maximum of 395 CFM below the 400 CFM cap that most local codes impose eliminating the need for additional controls.

Re-programming also disables the Power Boost function. After conversion, the installer affixes a label stating the unit has been converted to 395 CFM max. Once done, the unit cannot be changed back.

If your application calls for a make-up air solution, XO gives you more choices.

UL LISTED
XO is exclusively distributed by EASTERN MARKETING CORP.
24 Eisenhower Parkway
Roseland, NJ 07068