Topload Washers

Metered Commercial

Installation/Operation

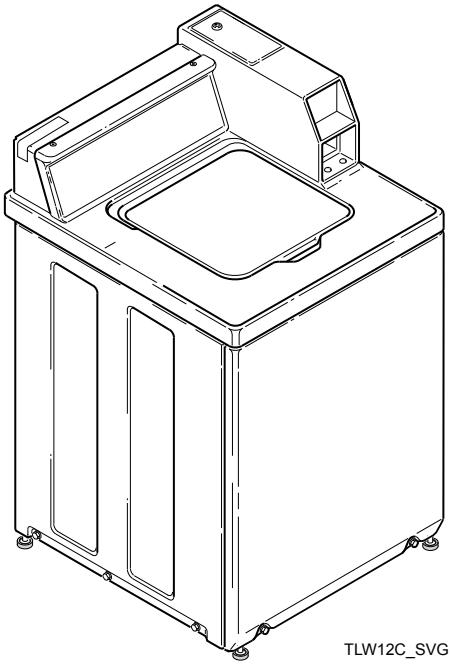

Original Instructions
Keep These Instructions for Future Reference.
CAUTION: Read the instructions before using the machine.
(If this machine changes ownership, this manual must accompany machine.)

Alliance™ Laundry Systems

www.alliancelaundry.com

Part No. 205161ENR3
February 2024

WARNING

Failure to install, maintain, and/or operate this machine according to the manufacturer's instructions may result in conditions which can produce bodily injury and/or property damage.

W030

WARNING

For your safety and to reduce the risk of fire or an explosion, do not store or use gasoline or other flammable vapors and liquids in the vicinity of this or any other appliance.

W022

Models with electronic control:

WARNING

Models with electronic control:

- **INGESTION HAZARD: This product contains a non-replaceable button cell or coin battery.**
  - **Battery Type: CR-2450/VAN, CR-2354/VCN, CR2032**
  - **Nominal voltage: 3V**
- **DEATH or serious injury can occur if ingested.**
- **A swallowed button cell or coin battery can cause Internal Chemical Burns in as little as 2 hours.**
- **KEEP new and used batteries OUT OF REACH of CHILDREN.**
- **Seek immediate medical attention if a battery is suspected to be swallowed or inserted inside any part of the body.**

W1076

NOTE: The WARNING and IMPORTANT instructions appearing in this manual are not meant to cover all possible conditions and situations that may occur. It must be understood that common sense, caution, and carefulness are factors which cannot be built into these washers. These factors MUST BE supplied by the person(s) installing, maintaining, or operating the unit.

Always contact the distributor, service agent, or the manufacturer about any problems or conditions you do not understand.

Read all instructions before using unit.

This product uses FreeRTOS V7.2.0 (www.freertos.org).

© Copyright, Alliance Laundry Systems LLC -
DO NOT COPY or TRANSMIT

Regulatory Statements

PRODUCT COMPLIANCE

Users of this product are cautioned not to make modifications or changes that are not approved by Alliance Laundry Systems, LLC. Doing so may void the compliance of this product with applicable laws and regulatory requirements and may result in the loss of the user's authority to operate the equipment.

UNITED STATES

This device complies with Part 15 of the FCC Rules. Operation is subject to the following two conditions; (1) This device may not cause harmful interference, and (2) this device must accept any interference received, including interference that may cause undesired operation.

This equipment has been tested and found to comply with the limits for a Class B digital device, pursuant to Part 15 of the FCC Rules. These limits are designed to provide reasonable protection against harmful interference in a residential installation. This equipment generates uses and can radiate radio frequency energy and, if not installed and used in accordance with the instructions, may cause harmful interference to radio communications. However, there is no guarantee that interference will not occur in a particular installation. If this equipment does cause harmful interference to radio or television reception, which can be determined by turning the equipment off and on, the user is encouraged to try to correct the interference by one or more of the following measures:

- Reorient or relocate the radio or television receiving antenna.
- Increase the separation between the computer equipment or receiver.
- Connect the equipment into an outlet on a circuit different from that to which the radio or television receiver is connected.
- Consult the dealer or experienced radio television technician for help.

CAUTION

To comply with the limits of the Class B device, pursuant to Part 15 of the FCC Rules, this device is to comply with Class B limits. All peripherals must be shielded and grounded. Operation with non-certified peripherals or non-shielded cables is likely to result in interference and reception of the device.

W1004

Radiation Exposure Statement : This equipment complies with FCC radiation exposure limits set forth for an uncontrolled environment. The radio installed in this equipment and is intended to operate with minimum distance 20cm between the radiator and your body.

Limited Channels Fixed For Use In USA : IEEE 802.11b or 802.11g or 802.11n(HT20) operation of this product in the U.S. is firmware-limited to Channel 1 through 11.

CANADA - CAN ICES-3(B)/NMB-3(B)

This device contains license-exempt transmitter(s)/receiver(s) that comply with Innovation, Science and Economic Development Canada's license-exempt RSS(s) standards. Operation is subject to the following two conditions:

- This device may not cause interference.
- This device must accept any interference, including interference that may cause undesired operation of the device.

Radiation Exposure Statement: This equipment complies with Innovation, Science and Economic Development Canada's radiation exposure limits set forth for in RSS-102. The radio installed in this equipment is installed and is intended to operate with minimum distance 20cm between the radiator and your body.

EUROPE

Products bearing the CE mark comply with the following EU directives:

- EMC Directive 2014/30/EU
- Machinery Directive 2006/42/EC
- Gas Appliance Directive 2016/426/EU
- RoHS Directive 2011/65/EU and its amendment directives; Commission Delegated Directive 2015/863 to restrict four phthalates

If the product has telecommunications functionality, it also complies with the requirements of the following EU directive:

- Radio Equipment Directive 2014/53/EU

Compliance with these Directives implies conformity to harmonized European standards that are noted in the EU Declaration of Conformity which is available upon request.

Alliance Laundry Systems products comply with the requirement of Article 12 as it can be operated in at least one Member State as examined and the product is compliant with Article 11 as it has no restrictions on putting into service in all EU member states.

This device contains a 2.4GHz transceiver, intended for indoor use only in all EU member states, EFTA states, and Switzerland. Attention has been given to allowed operational frequencies. For detailed information concerning installations in France, the user should contact the national spectrum authority in France (http://www.arcep.fr/)

Be aware that outdoor installations require special attention and will only be handled by trained and qualified installation personnel. No one from the general-public is permitted to install wireless products outdoors when external antennas, power and grounding must be installed for use.

© Copyright, Alliance Laundry Systems LLC - DO NOT COPY or TRANSMIT

AUSTRALIA/NEW ZEALAND

The radio in this equipment complies with and is certified to the Australian and New Zealand regulatory requirements.

BRAZIL ANATEL

This device is not entitled to protection against harmful interference and may not interfere with duly authorized systems.

CHINA SRRC

The radio device has recieved certification of conformance in accordance with the People's Republic of China State Radio Regulation Committee (SRRC) certification scheme. Integrations of this radio into a final product does not require additional radio certification provided installation instructions are followed. No changes are authorized to the radio or the antenna of the approved device.

JAPAN

This product is equipped with a certified wireless device pursuant to Article 2-1-19 of the Certification Ordinance. No changes are authorized to the radio or the antenna of the approved device.

MEXICO IFETEL

“The operation of this equipment is subject to the following two conditions: (1) it is possible that this equipment or device does not cause harmful interference and (2) this equipment or device must accept any interference, including that which may cause its unwanted operation.”

SOUTH KOREA (KC)

The radio device has received certification of conformance in accordance with the Radio Waves Act. Integration of this radio into a final product does not require additional radio certification provided installation instructions are followed. No changes are authorized to the radio or the antenna of the approved device.

TAIWAN

The information in this section applies to products bearing the Taiwan National Communications Commission mark:

This telecom equipment has complied with NCC regulations.

According to “Administrative Regulations of Low Power Radio Waves Radiated Devices:

Article 12 The low-power radio-frequency devices must not be altered by changing the frequency, enhancing emission power, adding external antenna, and modification of original design characteristic as well as function.

Article 14 The operation of the low-power radio-frequency devices is subject to the conditions that no harmful interference is caused. The user must stop operating the device immediately should harmful interference is caused and shall not resume until the condition causing the harmful interference has been corrected.

Moreover, the interference must be accepted that may be caused by the operation of an authorized communications, or ISM equipment. (1) Precautions (marked in the product manual and on outer packaging)

THAILAND

The information in this section applies to products approved by the Thailand National Communications Commission:

These telecommunication and device are compliance with the requirements of National Broadcasting and Telecommunication Commission.

© Copyright, Alliance Laundry Systems LLC -
DO NOT COPY or TRANSMIT

Safety Information

Explanation of Safety Instruction Messages

Precautionary statements ("DANGER," "WARNING," and "CAUTION"), followed by specific instructions, are found in this manual and on machine decals. These precautions are intended for the personal safety of the operator, user, servicer, and those maintaining the machine.

DANGER

Indicates an imminently hazardous situation that, if not avoided, will cause severe personal injury or death.

WARNING

Indicates a hazardous situation that, if not avoided, could cause severe personal injury or death.

CAUTION

Indicates a hazardous situation that, if not avoided, may cause minor or moderate personal injury or property damage.

Additional precautionary statements ("IMPORTANT" and "NOTE") are followed by specific instructions.

IMPORTANT: The word "IMPORTANT" is used to inform the reader of specific procedures where minor machine damage will occur if the procedure is not followed.

NOTE: The word "NOTE" is used to communicate installation, operation, maintenance or servicing information that is important but not hazard related.

Important Safety Instructions

Save These Instructions

WARNING

To reduce the risk of fire, electric shock, serious injury or death to persons when using your washer, follow these basic precautions:

W023

- Read all instructions before using the washer.
- Install the washer according to the INSTALLATION INSTRUCTIONS. Refer to the EARTH/GROUND INSTRUCTIONS in the INSTALLATION manual for the proper earth/ground connection of the washer. All connections for water, drain, electrical power and earth/ground must comply with local codes and be made by licensed personnel when required. Do not do it yourself.
- Do not install or store the washer where it will be exposed to water and/or weather.
- Do not wash articles that have been previously cleaned in, washed in, soaked in, or spotted with gasoline, dry-cleaning solvents, or other flammable or explosive substances as they give off vapors that could ignite or explode.
- Do not add the following substances or textiles containing traces of the following substances to the wash water: gasoline, kerosene, waxes, cooking oils, vegetable oils, machine oils, dry-cleaning solvents, flammable chemicals, thinners or other flammable or explosive substances. These substances give off vapors that could ignite, explode or cause the fabric to catch on fire by itself.
- Under certain conditions, hydrogen gas may be produced in a hot water system that has not been used for two weeks or more. HYDROGEN GAS IS EXPLOSIVE. If the hot water system has not been used for such a period, before using a washing machine or combination washer-dryer, turn on all hot water faucets and let the water flow from each for several minutes. This will release any accumulated hydrogen gas. THE GAS IS FLAMMABLE, DO NOT SMOKE OR USE AN OPEN FLAME DURING THIS TIME.
- To reduce the risk of an electric shock or fire, DO NOT use an extension cord or an adapter to connect the washer to the electrical power source.
- Do not allow children to play on or in the washer. Close supervision of children is necessary when the washer is used near children. This appliance is not intended for use by persons (including children) with reduced physical, sensory or mental capabilities, or lack of experience and knowledge, unless they have been given supervision or instruction concerning the use of the appliance by a person responsible for their safety. This is a safety rule for all appliances.
- Cleaning and user maintenance shall not be made by children without supervision.

© Copyright, Alliance Laundry Systems LLC - DO NOT COPY or TRANSMIT

- Children less than three years should be kept away unless continuously supervised.
- Models with electronic control: Remove and immediately recycle or dispose of used controls according to local regulations and keep away from children. Do NOT dispose of controls in the trash or incinerate. Do not attempt to remove the batteries. Even used batteries may cause severe injury or death. Call a local poison control center for treatment information. Non-rechargeable batteries are not to be recharged. Do not force discharge, recharge, disassemble, heat above 158ºF [70ºC] or incinerate. Doing so may result in injury due to venting, leakage or explosion resulting in chemical burns.
- Never operate the washer with any guards, panels and/or parts removed or broken. DO NOT tamper with the controls or bypass any safety devices.
- Use your washer only for its intended purpose, washing clothes. Always follow the fabric care instructions supplied by the garment manufacturer.
- Always read and follow manufacturer's instructions on packages of laundry and cleaning aids. To reduce the risk of poisoning or chemical burns, keep them out of the reach of children at all times (preferably in a locked cabinet). Heed all warnings or precautions.
- Do not use fabric softeners or products to eliminate static unless recommended by the manufacturer of the fabric softener or product.
- Lid MUST BE CLOSED any time the washer is to agitate or spin. DO NOT bypass the lid switch to permit the washer to agitate or spin with the lid open. A brake will stop the washtub within seconds if the lid is opened during spinning. If the washtub does not stop when the lid is opened, remove the washer from use and call the service person.
- Be sure water connections have a shut-off valve and that fill hose connections are tight. CLOSE the shut-off valves at the end of each wash day.
- Keep your washer in good condition. Bumping or dropping the washer can damage safety features. If this occurs, have your washer checked by a qualified service person.
- Do not repair or replace any part of the washer, or attempt any servicing unless specifically recommended in the user-maintenance instructions or in published user-repair instructions that you understand and have the skills to carry out. ALWAYS disconnect the washer from electrical supply before attempting any service.
- Disconnect the power cord by grasping the plug, not the cord. If the supply cord is damaged, it must be replaced by the manufacturer, its service agent or similarly qualified persons in order to avoid a hazard.
- Before the washer is removed from service or discarded, remove the lid or door to the washing compartment.
- Failure to install, maintain, and/or operate this washer according to the manufacturer's instructions may result in conditions which can produce bodily injury and/or property damage.

NOTE: The WARNING and IMPORTANT SAFETY INSTRUCTIONS appearing in this manual are not meant to cover all possible conditions and situations that may occur. Observe and be aware of other labels and precautions that are located on the machine. They are intended to provide instruction for safe use of the machine. Common sense, caution and care must be exercised when installing, maintaining, or operating the washer.

Always contact your dealer, distributor, service agent or the manufacturer about any problems or conditions you do not understand.

© Copyright, Alliance Laundry Systems LLC -
DO NOT COPY or TRANSMIT

Table of Contents

Dimensions..... 10

Installation.....11
Before You Start..... 11
Tools..... 11
Order of Installation Steps..... 11
Remove the Shipping Brace and Shipping Plug.....11
Wipe Out Inside of Wash Tub.....12
Connect Fill Hoses.....12
Water Supply Requirements..... 13
Connecting Hoses.....13
Risers.....13
Connect Drain Hose to Drain Receptacle.....14
Drain Facilities.....14
High Standpipe Installation..... 14
Low Standpipe Installation.....15
Position and Level the Washer.....15
Plug In the Washer..... 16
Electrical Requirements..... 16
Earth/Ground Instructions..... 17
Add Water to the Washer..... 17
Check Lid Switch..... 17
Connect Laundry IQ to Gateway (Select Models)..... 17
Check Installation..... 18
Vending..... 18
Meter Case..... 18
Models Prepped for Card Reader 18
Additional Security.....18

Operation..... 20
Operation Instructions..... 20
Add Detergent.....20
Load Laundry..... 20
Close Lid.....20
Set Cycle.....20
Set Wash Temperature..... 21
Select Wash Level..... 21
Insert Coins or Card.....21
Start Washer.....22
Indicator Lights.....22

© Copyright 2024, Alliance Laundry Systems LLC
All rights reserved. No part of the contents of this book may be reproduced or transmitted in any form or by any means without the expressed written consent of the publisher.

Maintenance **23**
User-Maintenance Instructions 23
Cold Weather Care 23
Care of Your Washer 23
Replacing Hoses 23
Filter Screens 23
Laundry IQ (Select Models) 23
Reinstallation of Shipping Materials 23
Shipping Brace 23
Shipping Plug 23
Motor Overload Protector 23

Troubleshooting **25**

Contact Information **27**

Installer Checklist **28**

© Copyright, Alliance Laundry Systems LLC -
DO NOT COPY or TRANSMIT

Dimensions

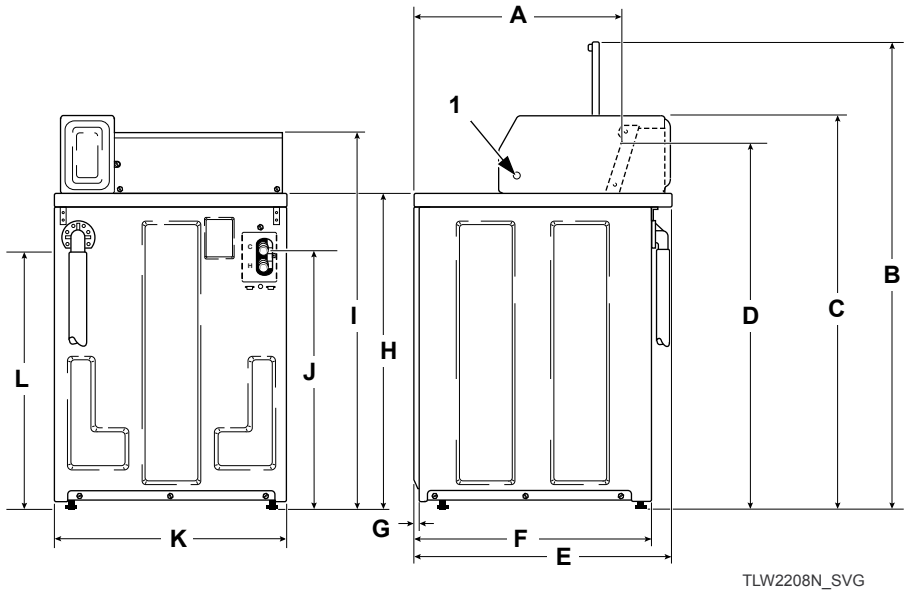

1. Pilot Hole

A	22.44 in. [570 mm]
B	51 in. [1295 mm]
C - Standard Capacity Meter Case	43 in. [1092 mm]
C - High Capacity Meter Case	43.875 in. [1114 mm]
D	38.19 in. [970 mm]
E	28 in. [711 mm]
F	26 in. [660 mm]
G	0.44 in. [11 mm]
H	36 in. [914 mm]
I	41.25 in. [1048 mm]
J	28.75 in. [730 mm]
K	25.63 in. [651 mm]
L	30.5 in. [775 mm]

© Copyright, Alliance Laundry Systems LLC -
DO NOT COPY or TRANSMIT

Installation

Before You Start

Tools

For most installations, the basic tools you will need are:

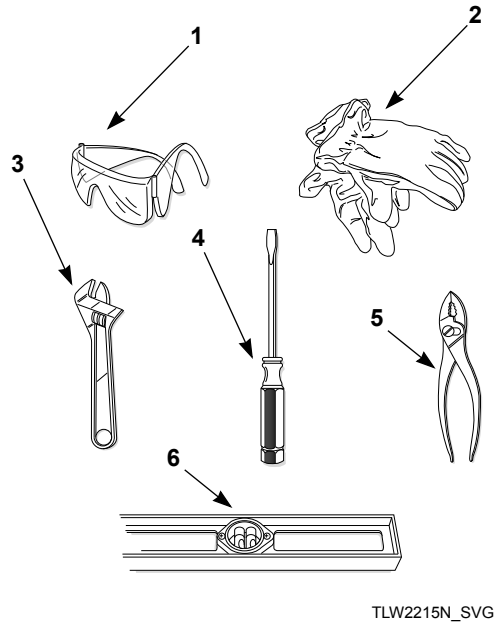

NOTE: A cloth rag and all-purpose cleaner are also needed.

1. Safety Glasses
2. Gloves
3. Wrench
4. Screwdriver
5. Pliers
6. Level

Figure 1

NOTE: If the washer is delivered on a cold day (below freezing), or is stored in an unheated room or area during the cold months, do not attempt to operate it until the washer has had a chance to warm up.

NOTE: Install dryer before washer. This allows room for attaching exhaust duct.

NOTE: This appliance is suitable for use in countries having a warm, damp climate.

Order of Installation Steps

The proper order of steps must be followed to ensure correct installation. Refer to the list below when installing your unit.

1. Remove the shipping brace and shipping plug.
2. Wipe out inside of the washer.
3. Connect the fill hoses.
4. Connect the drain hose to the drain receptacle.
5. Position and level the washer.
6. Plug in the washer.
7. Add water to the washer.
8. Check the lid switch.
9. Connect Laundry IQ™ to gateway (select models).
10. Check installation.

Remove the Shipping Brace and Shipping Plug

1. Remove the shipping brace from under the lid.
2. The shipping plug will be released from the base of the washer when removing the cardboard base from the washer.

The shipping brace and plug should be saved and must be reinstalled whenever washer is moved or transported to a new location. This will prevent damage to washer components.

Do not tilt washer to front or sides when moving.

Refer to User-Maintenance section for instructions on reinstalling shipping brace and shipping plug.

© Copyright, Alliance Laundry Systems LLC - DO NOT COPY or TRANSMIT

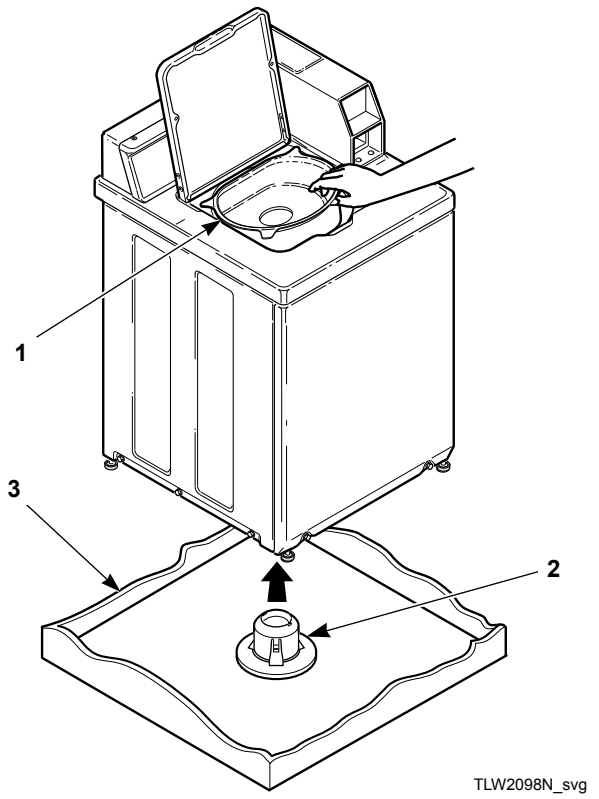

1. Shipping Brace
2. Shipping Plug
3. Cardboard Base

Figure 2

Wipe Out Inside of Wash Tub

Prior to first wash, use an all purpose cleaner or a detergent and water solution and a damp cloth to remove shipping dust from inside of the washer.

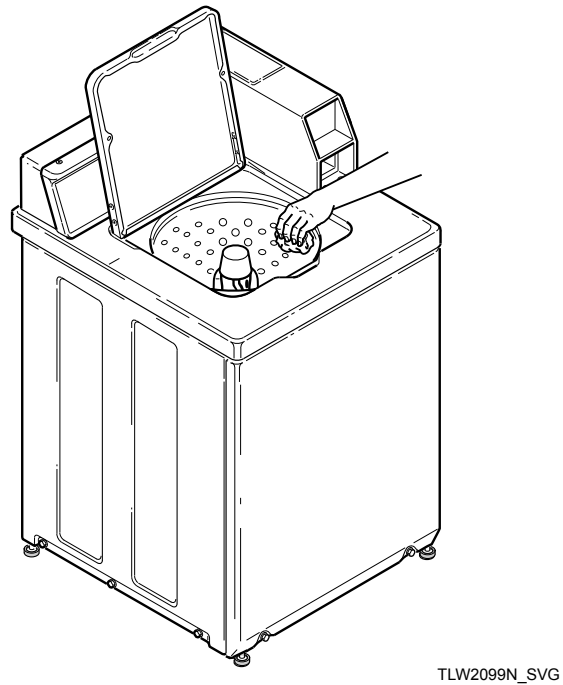

Figure 3

Connect Fill Hoses

WARNING

Under certain conditions, hydrogen gas may be produced in a hot water system that has not been used for two weeks or more. HYDROGEN GAS IS EXPLOSIVE. If the hot water system has not been used for such a period and before using the washer, turn on all hot water faucets and let the water flow from each for several minutes. This will release any accumulated hydrogen gas. The gas is flammable. Do not smoke or use an open flame during this time.

W029

Mixing Valve Flow Rates

Pressure psi [kPa]	HOT gallons per minute [liters per minute]	COLD gallons per minute [liters per minute]	WARM gallons per minute [liters per minute]
20 [138]	3.4 [12.9]	3.4 [12.9]	4.0 [15.1]
120 [827]	4.6 [17.4]	4.6 [17.4]	4.6 [17.4]

© Copyright, Alliance Laundry Systems LLC - DO NOT COPY or TRANSMIT

Water Supply Requirements

Water supply faucets must fit standard 3/4 inch [19 mm] female garden hose couplings. DO NOT USE SLIP-ON OR CLAMP-ON CONNECTIONS.

NOTE: Water supply faucets should be readily accessible to permit turning them off when washer is not being used.

Recommended cold water temperature is 50° to 75° Fahrenheit [10° to 24° Celsius] . Recommended maximum hot water temperature is 125° Fahrenheit [51° Celsius] . Warm water is a mixture of hot and cold water. Warm water temperature is dependent upon the water temperature and the pressure of both the hot and cold water supply lines.

WARNING

To prevent personal injury, avoid contact with inlet water temperatures higher than 125° Fahrenheit [51° Celsius] and hot surfaces.

W748

Water pressure must be a minimum of 20 to a maximum of 120 pounds per square inch [minimum of 138 to a maximum of 827 kPa] static pressure measured at the faucet.

NOTE: Water pressure under 20 pounds per square inch [138 kPa] will cause an extended fill time in the washer and decreased rinse performance.

Turn on the water supply faucets and flush the lines for approximately two minutes to remove any foreign materials that could clog the screens in the water mixing valve. This is especially important when installing your washer in a newly constructed or renovated building. Build-up may have occurred during construction.

Connecting Hoses

1. Insert rubber washers and filter screens (from accessories bag) in water fill hose couplings (two hoses supplied with washer). The filter screen must be facing outward.
2. Connect fill hose couplings with filter screens to water supply faucets.
3. Connect the other hose couplings to the hot and cold valve connections at the rear of the washer.
4. Make sure the hose from the hot water faucet goes to the water mixing valve marked “H” and the hose from the cold faucet goes to the valve marked “C”.
5. Thread hose couplings onto valve connections finger tight. Then turn 1/4 turn with pliers.

   IMPORTANT: DO NOT cross thread or overtighten couplings. This will cause them to leak.
6. Turn water on and check for leaks.
7. If leaks are found, retighten the hose couplings.
8. Continue tightening and rechecking until no leaks are found.

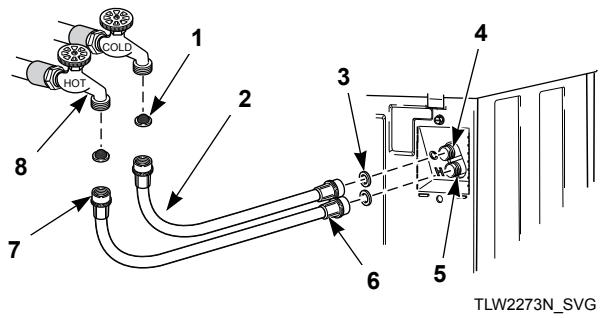

1. Filter Screen (Screen must be facing outward)
2. Fill Hose
3. Plain Rubber Washer
4. Cold Water Connection
5. Hot Water Connection
6. Install this end of hose to valve connections at rear of washer
7. Install this end of hose to water supply faucet
8. Faucet

Figure 4

IMPORTANT:

Hoses and other rubber parts deteriorate after extended use. Hoses may develop cracks, blisters or material wear from the temperature and constant high pressure they are subjected to.

All hoses should be checked on a monthly basis for any visible signs of deterioration. Any hose showing the signs of deterioration listed above should be replaced immediately. All hoses should be replaced every five years.

IMPORTANT: Turn off water supply faucets after checkout and demonstration. Owner should turn off water supply whenever there will be an extended period of non-use.

Risers

Risers (or air cushions) may have to be installed if the pipes knock or pound when flow of water stops. The risers are more efficient when installed as close as possible to the water supply faucets. Refer to *Figure 5* .

© Copyright, Alliance Laundry Systems LLC - DO NOT COPY or TRANSMIT

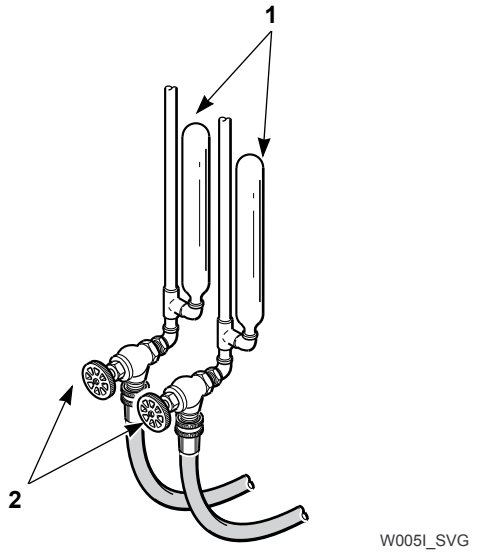

1. Risers (Air cushions)
2. Water Supply Faucets

Figure 5

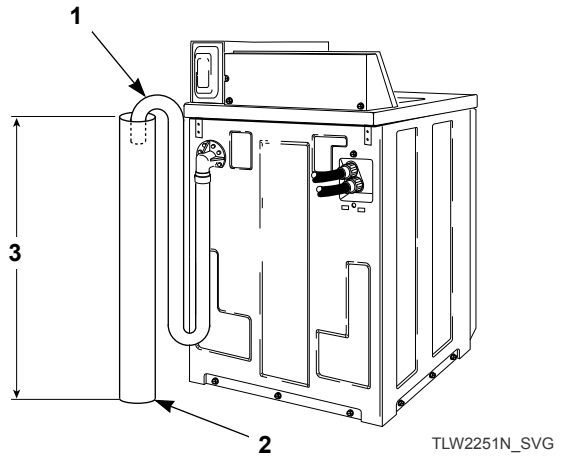

1. Drain Hose
2. Standpipe
3. Recommended Standpipe Height 36 in. [914 mm] Minimum

Figure 6

Connect Drain Hose to Drain Receptacle

IMPORTANT: The drain hose installation is a very important factor in the washer installation. If care is not taken when the drain hose is installed, a siphoning action can be started which will cause water to be siphoned from the washer during the cycle.

Drain Facilities

End of drain hose should never be in water as siphoning action can be started that will cause water to be siphoned back into the washer.

The curved end of drain hose MUST be installed even with or above the height of the cabinet top of the washer to prevent siphoning. Refer to *Figure 6* .

The standpipe or drain receptacle must be capable of handling a minimum of 1-1/2 inches [38 mm] outside diameter drain hose. The drain hose should fit loose within the standpipe (it should not be snug fit). Never install the drain hose into a “sealed” drain system as air cannot escape and will restrict the water from being drained from the washer. A sealed drain system may also allow water to be pumped back into the washer during agitation. Both of these conditions may result in flooding of the washer.

Remove the drain hose from its shipping position on the rear of the washer by unhooking the hose from the retainer clamp.

If necessary, follow the instructions for your type of drain receptacle (high standpipe or low standpipe) to properly install the drain hose.

High Standpipe Installation

NOTE: No. 562P3 Siphon Break Kit and No. 25863 Hose Coupling are not required for this type of installation.

© Copyright, Alliance Laundry Systems LLC - DO NOT COPY or TRANSMIT

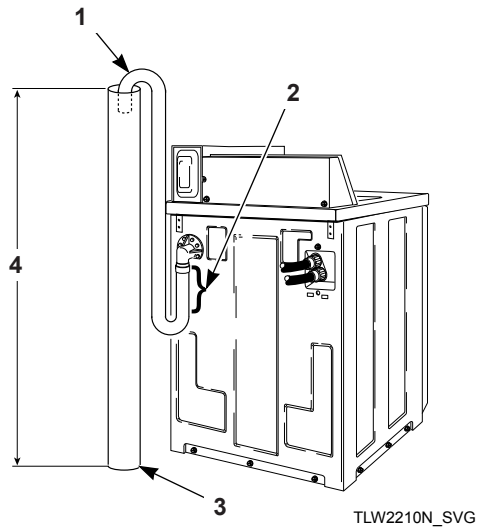

1. Drain Hose
2. Cut Drain Hose off at This End to Fit the Washer Installation
3. Standpipe
4. Maximum Standpipe Height Not To Exceed 5 ft. [1.5 m]

Figure 7

IMPORTANT: Drain receptacle must be capable of handling a minimum of 1-1/2 inch [38 mm] outside diameter drain hose.

Low Standpipe Installation

If the drain facility is lower than the cabinet top, a siphon break kit, Part No. 562P3, must be installed in the drain hose to prevent siphoning action and drain hose MUST be cut to fit the washer installation. Refer to *Figure 8* . Use one No. 25863 Hose Coupling to splice hose. The No. 562P3 Siphon Break Kit and No. 25863 Hose Coupling are available as optional equipment at extra cost through an authorized dealer or parts distributor. Installation instructions are supplied with the kit.

OPTIONAL: Raise the standpipe to the recommended height of 36 inches [914 mm] .

IMPORTANT: Drain receptacle must be capable of handling a minimum of 1-1/2 inch [38 mm] outside diameter drain hose.

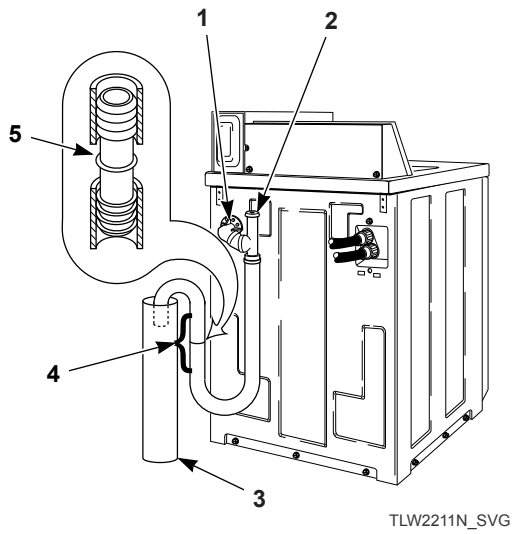

1. Drain Hose Elbow
2. 562P3 Siphon Break Kit
3. Standpipe
4. Cut Hose in This Area and Install No. 25863 Hose Coupling
5. 25863 Hose Coupling

Figure 8

Position and Level the Washer

1. Position washer so it has sufficient clearance for installation and servicing.
2. Place washer in position on a clean, dry, and reasonably firm floor. Installing the washer on any type of carpeting is not recommended.
3. Place rubber cups (from accessories bag) on all four leveling legs.
4. Place a level on the cabinet top and check if the washer is level from side to side and front to back.
5. If washer is not level, tilt washer back to access the front leveling legs. Loosen the locknuts and adjust legs by screwing into or out of washer base.
6. Once adjusted, tilt the washer forward on front legs and lower back down into position to set the rear self-leveling legs.
7. Washer must not rock. When washer is level and does not rock, tighten locknuts securely against bottom of washer base. If these locknuts are not tight, washer will not remain stationary during operation.

Improper installation or flexing of weak floor will cause excessive vibration.

Do not slide washer across floor once the leveling legs have been extended, as legs and base could become damaged.

© Copyright, Alliance Laundry Systems LLC - DO NOT COPY or TRANSMIT

NOTE: For areas with uneven floors, a No. 566P3 Adjustable Rear Leg Extension Kit is available as optional equipment at extra cost.

8. Verify that unit does not rock.

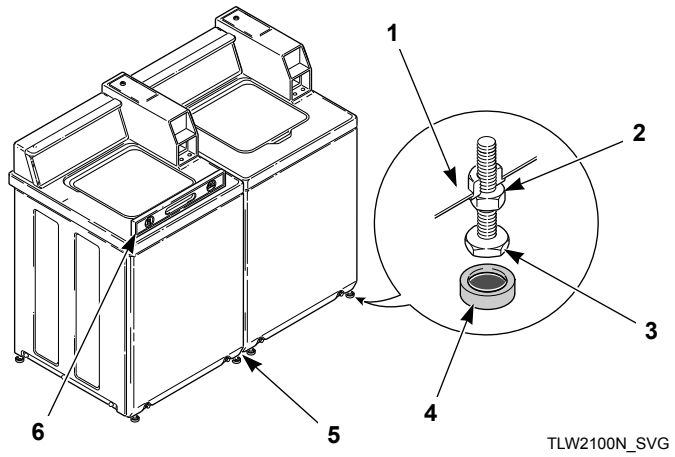

1. Washer Base
2. Locknut
3. Leveling Leg
4. Rubber Cup
5. 1/2 inch [13 mm] Clearance Between Washers
6. Level

Figure 9

Plug In the Washer

Electrical Requirements

120 Volt, 60 Hertz with 3-Prong Earth/Ground Plug

NOTE: The wiring diagram is located in the control hood.

NOTE: The wiring diagram is located in the control cabinet.

WARNING

To reduce the risk of fire, electric shock, serious injury or death, all wiring and protective earth/ground connections MUST conform with the latest edition of the National Electrical Code, ANSI/NFPA No. 70, and such local regulations as might apply. It is the customer's responsibility to have the wiring, fuses and circuit breakers installed by a qualified electrician to make sure adequate electrical power is available to the washer.

W824

When plugging in the washer:

- DO NOT overload circuits.
- DO NOT use an extension cord.
- DO NOT use an adapter.
- DO NOT operate other appliances on the same circuit. Use separately fused 15 Amp circuits.

The washer is designed to be operated on a separate branch, polarized, three-wire, effective earth/ground, 120 Volt, 60 Hertz, AC (alternating current), circuit protected by a 15 ampere fuse, equivalent fusetron or circuit breaker.

The three-prong earth/ground plug on the power cord should be plugged directly into a polarized three-slot effective earth/ground receptacle rated 110/120 Volts AC (alternating current) 15 Amps. Refer to *Figure 10* to determine correct polarity of the wall receptacle.

Standard 120 Volt, 60 Hertz 3-Wire Effective Earth/ Ground Circuit

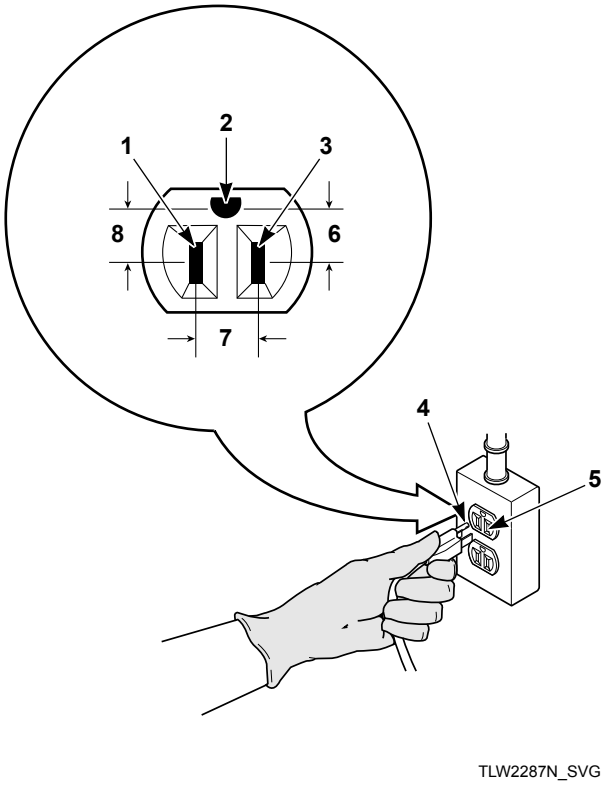

1. L1
2. Earth/Ground
3. Neutral Side
4. Round Earth/Ground Prong
5. Neutral
6. 0 V.A.C.
7. 120 ± 12 V.A.C.
8. 120 ± 12 V.A.C.

Figure 10

© Copyright, Alliance Laundry Systems LLC - DO NOT COPY or TRANSMIT

WARNING

To reduce the risk of an electric shock or fire, DO NOT use an extension cord or an adapter to connect the washer to the electric power source.

W082

Earth/Ground Instructions

This appliance must be properly connected to protective earth/ground. In the event of malfunction or breakdown, the earth/ground will reduce the risk of electric shock by providing a path of least resistance for electric current.

The appliance is equipped with a cord having an equipment earth/ground conductor and a three-prong earth/ground plug. The plug must be plugged into an appropriate outlet that is properly installed and connected to a protective earth/ground in accordance with all local codes and ordinances.

WARNING

Improper connection of the equipment earth/ground conductor can result in a risk of electric shock. Check with a qualified electrician or service person if you are in doubt as to whether the unit is properly connected to a protective earth/ground.

W893

- DO NOT modify the plug provided with the unit – if it will not fit the outlet, have a proper outlet installed by a qualified electrician.
- If the laundry room's electrical supply does not meet the above specifications and/or if you are not sure the laundry room has an effective earth/ground, have a qualified electrician or your local electrical utility company check it and correct any problems.

WARNING

Any disassembly requiring the use of tools must be performed by a suitably qualified service person.

W299

WARNING

This unit is equipped with a three-prong (earth/ground) plug for your protection against shock hazard and should be plugged directly into a protective earth/ ground three-prong receptacle. Do not cut or remove the earth/ground prong from this plug.

W823

Add Water to the Washer

To prevent damage to pump, do not run washer before adding at least one quart [0.95 liter] water to the tub. If the washer is run before any water is added, the pump seal may overheat, causing the pump to leak. Once installed, the water retained in the drain system from the previous cycle will provide sufficient cooling to prevent pump seal damage.

NOTE: The agitator should not be removed except for service. The washtub is designed to be self-cleaning.

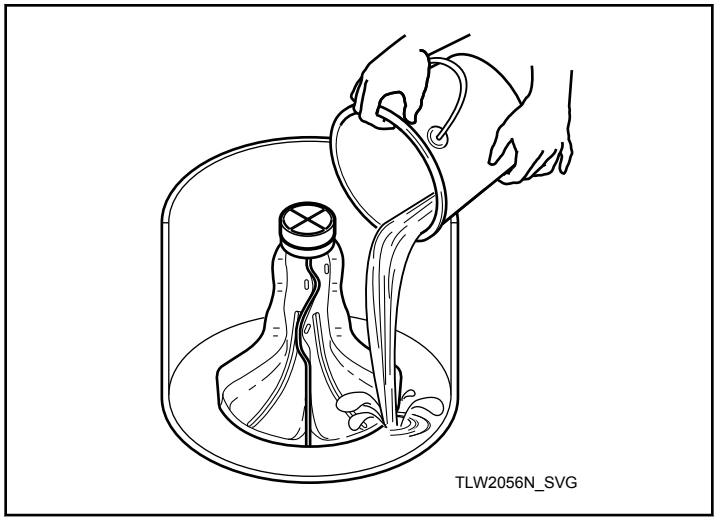

Figure 11

Check Lid Switch

Washer should stop filling, agitating and spinning when lid is opened during a wash cycle.

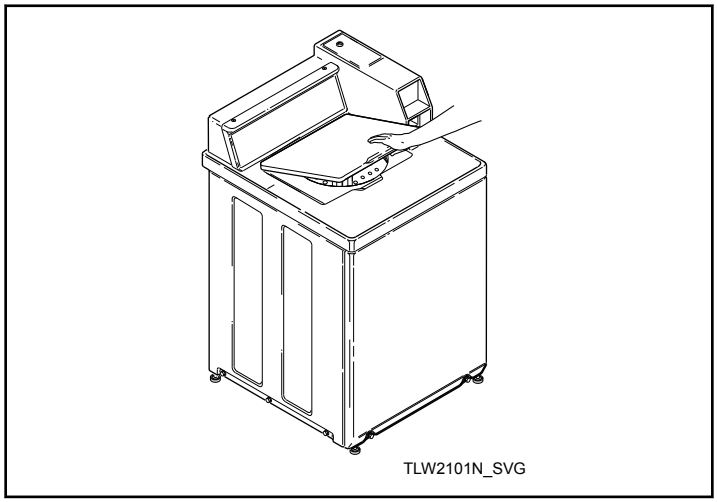

Figure 12

Connect Laundry IQ to Gateway (Select Models)

1. Connect machine to power source.

© Copyright, Alliance Laundry Systems LLC - DO NOT COPY or TRANSMIT

2. Power and connect gateway to internet source (ethernet preferred).
3. Call Software Support at +1-844-241-5519 to finalize connection.

   NOTE: Ensure gateway is positioned in line of sight to equipment. Do not install close to other electronic devices.

Check Installation

1. Refer to Installer Checklist on the back cover of this manual and make sure that washer is installed correctly.
2. Run washer through one complete cycle to make sure it is operating properly.

Vending

Meter Case

The factory mounted coin meter case does not include the service door lock, coin slide (if applicable), coin drawer, coin drawer lock or keys. These parts must be ordered (at extra cost) according to the purchaser's requirements direct from the manufacturer of your choice.

NOTE: You have the option of using a screw type lock or a 1/4 turn lock on the meter case service door. If you choose to use a screw lock, then the special bracket (located inside the meter case) must be used. DO NOT use the special bracket if a 1/4 turn lock is used.

Coin Drawer Security - For additional security, drill out the two pilot holes on each side of the front of the meter case to 1/4 or 5/16 inch [6.4 or 7.9 mm] holes and install a bicycle lock through these holes.

NOTE: An 8 in. [203 mm] coin drawer is required for coin operated electronic control models.

Models Prepped for Card Reader

The machine is shipped from the factory with the Electronic Control Diagnostic Harness Assembly unplugged. To avoid unauthorized manual programming or vending, perform the following steps.

1. Open control panel.
2. Locate diagnostic harness on electronic control.
3. Plug connectors for "white/black" wire and "blue/red" wire together.

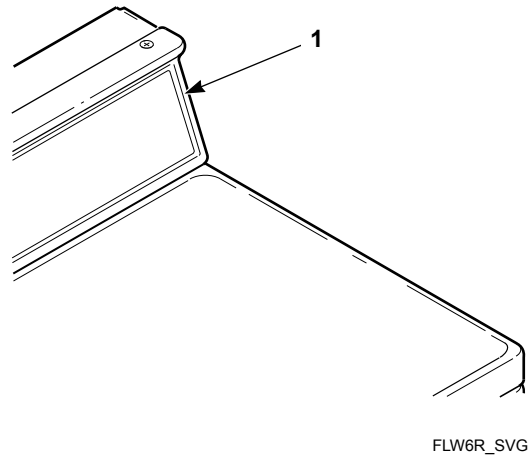

1. Control Panel

Figure 13

Additional Security

Located on the service door of meter case models is a flat Phillips head screw. During shipment, this screw is used to attach the service door to the meter case. For additional security, this screw can be reinstalled inside the control hood of your unit. Refer to instructions below for installation.

Tamper-resistant screws also can be installed for additional security. Tamper-resistant screws, bits and bit holder are available as optional equipment at extra cost. Part numbers are:

- Bit (No. 8 screws) Part No. 281P4
- Bit (No. 12 screws) Part No. 282P4
- Control panel tamper-resistant screw Part No. 35528
- Front panel tamper-resistant screw Part No. 35527

The following list is the procedure required to install the Phillips head screw and tamper-resistant screws:

WARNING

Any disassembly requiring the use of tools must be performed by a suitably qualified service person.

W299

© Copyright, Alliance Laundry Systems LLC - DO NOT COPY or TRANSMIT

WARNING

To reduce the risk of electric shock, fire, explosion, serious injury or death:

- **Disconnect electric power to the washer before servicing.**
- **Never start the washer with any guards/panels removed.**
- **Whenever earth/ground wires are removed during servicing, these earth/ground wires must be reconnected to ensure that the washer is properly connected to a protective earth/ground.**

W883

1. Remove the Phillips head screw from service door (refer to *Figure 14*).
2. Remove two screws holding control panel to control hood.
3. Tilt control panel forward and lay on a protective pad to prevent scratching of cabinet top.
4. Insert Phillips head screw down through double “D” hole in left rear corner of cabinet top (inside control hood) until it engages retainer nut located on left rear corner gusset of cabinet.
5. Finger tighten screw.

   IMPORTANT: Do not use a power driver to tighten screw. Torque of a power driver could over-tighten screw causing damage to cabinet assembly.
6. Secure control panel to control hood using two No. 8 tamper-resistant screws, Part No. 35528.
7. Remove two screws holding front panel to base of washer and install two No. 12 tamper-resistant screws, Part No. 35527.

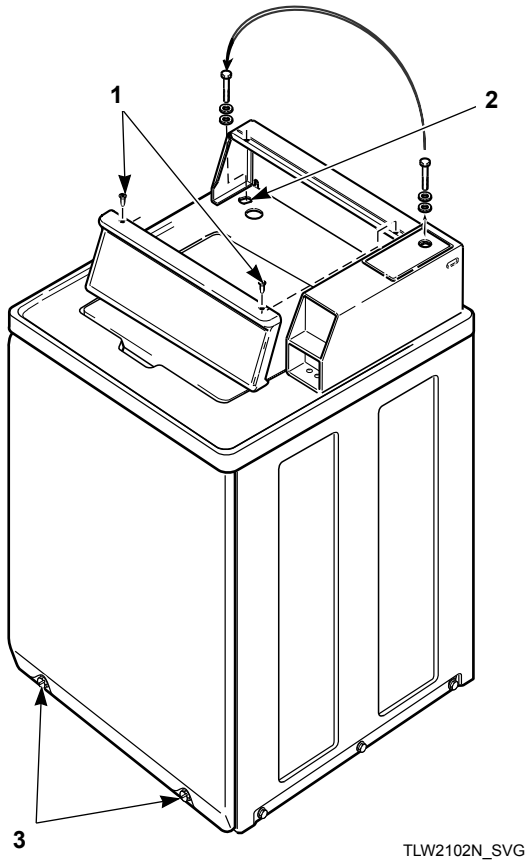

1. 35528 No. 8 Screws
2. Double “D” Hole
3. 35527 No. 12 Screws

Figure 14

© Copyright, Alliance Laundry Systems LLC -
DO NOT COPY or TRANSMIT

Operation

Operation Instructions

IMPORTANT: Prior to first wash, use an all-purpose cleaner, or a detergent and water solution, and a damp cloth to remove shipping dust from inside of washer.

IMPORTANT: Remove all sharp objects from laundry to avoid tears and rips to items during normal machine operation.

Add Detergent

1. Pour measured amount of detergent into washtub. Refer to package directions.
2. NEVER POUR UNDILUTED BLEACH DIRECTLY ON LAUNDRY. Follow package directions when using bleach.

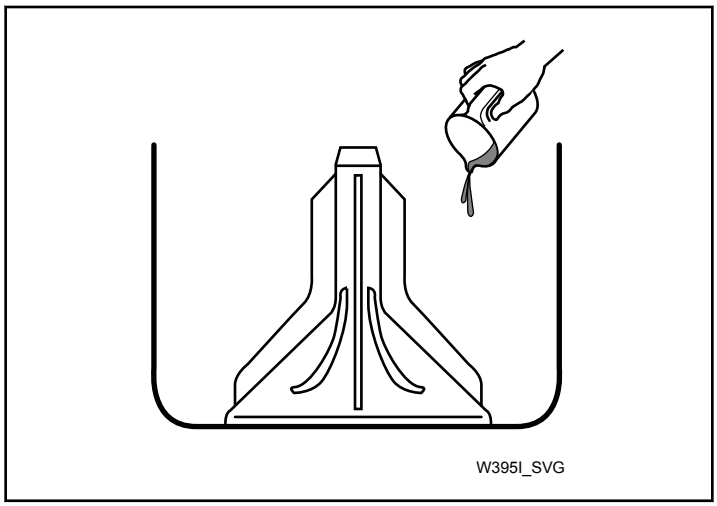

Figure 15

Load Laundry

1. Load dry clothes loosely into washtub – DO NOT overload! (14 lbs. [6.3 kg] maximum dry clothes load)
2. When washing large items such as shag rugs and bedspreads, add several small items to balance wash load.

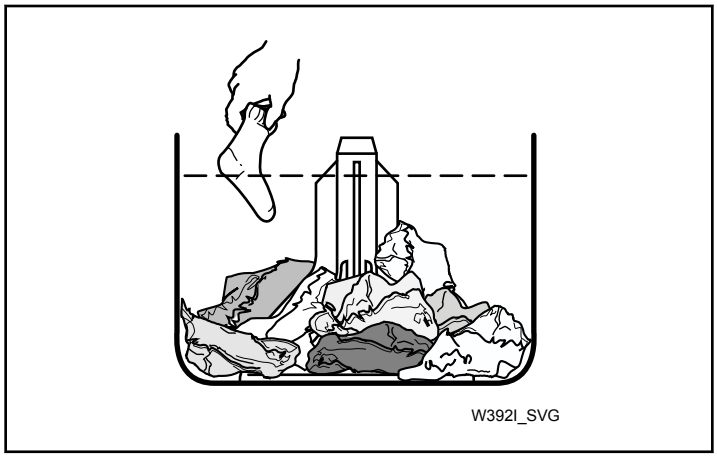

Figure 16

Close Lid

Washer will not operate with lid open.

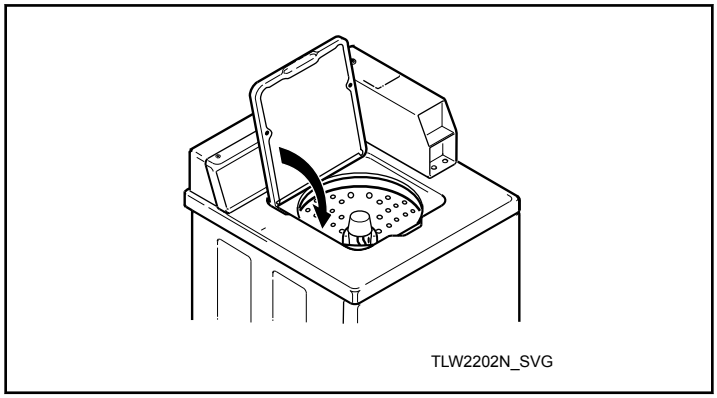

Figure 17

Set Cycle

Push Cycle touchpad for NORMAL, SYNTHETIC or DELICATE. Light indicates selection.

NOTE: The NORMAL cycle is recommended for everyday cottons and linens.

© Copyright, Alliance Laundry Systems LLC - DO NOT COPY or TRANSMIT

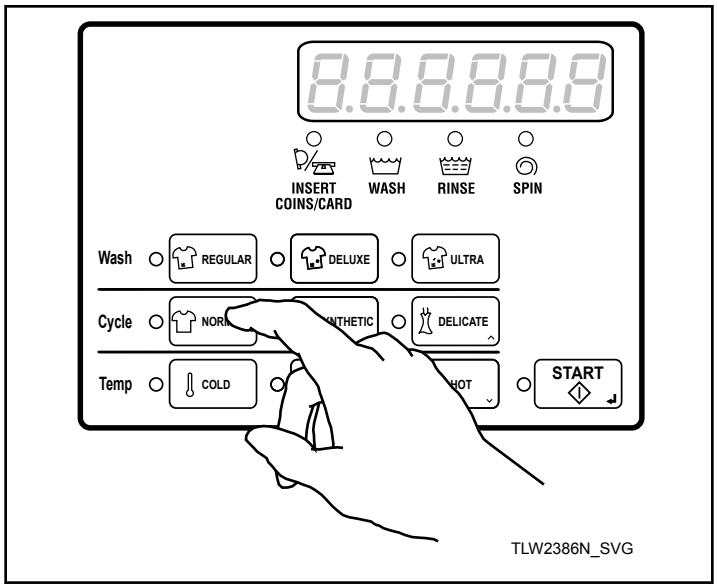

Figure 18

Set Wash Temperature

Push Temp touchpad for COLD, WARM or HOT. Light indicates selection.

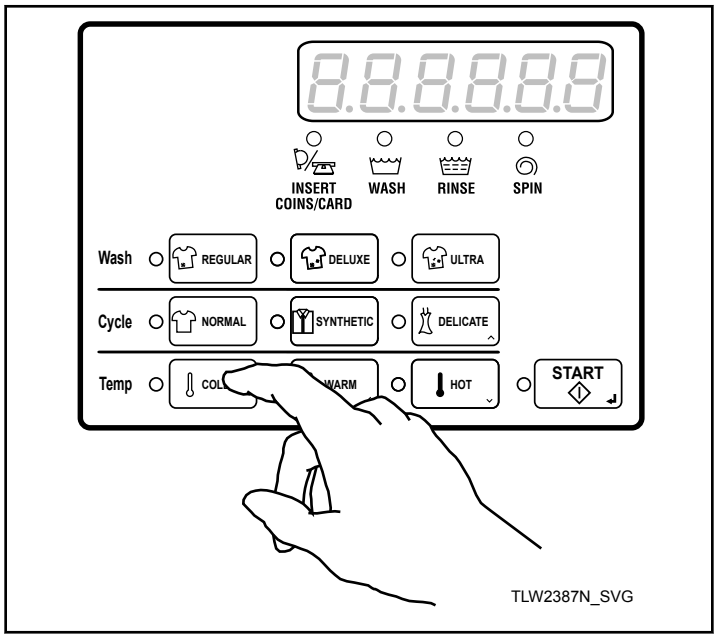

Figure 19

Select Wash Level

Push Wash touchpad for REGULAR, DELUXE or ULTRA. Light indicates selection.

NOTE: The REGULAR wash level is recommended for everyday cottons and linens.

Fabric softener should only be used when the ULTRA wash level is selected.

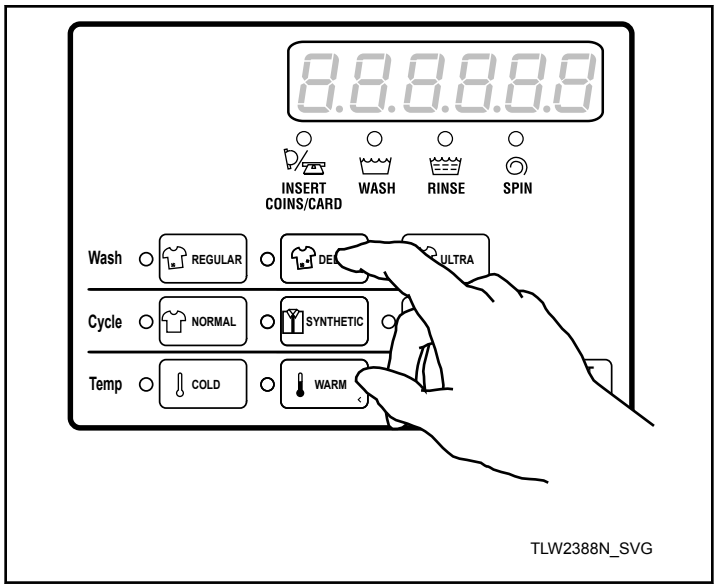

Figure 20

Insert Coins or Card

To Insert Coins

1. Insert coin(s) in coin slot.
2. Check pricing as seen on digital display.

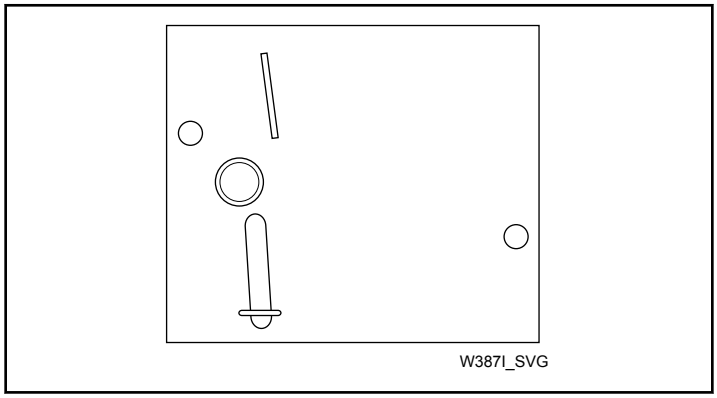

Figure 21

To Insert Card

Insert card into opening.

© Copyright, Alliance Laundry Systems LLC -
DO NOT COPY or TRANSMIT

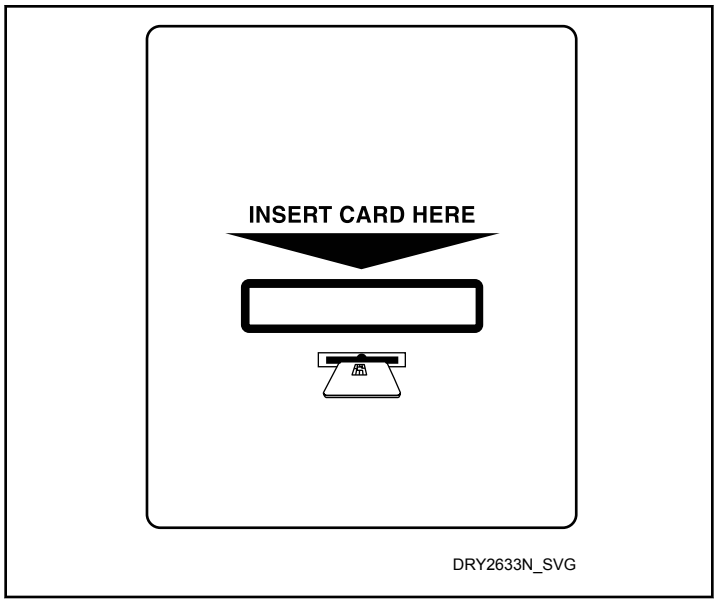

Figure 22

Start Washer

After vend price has been satisfied, push the START pad. LID MUST BE CLOSED TO START WASHER.

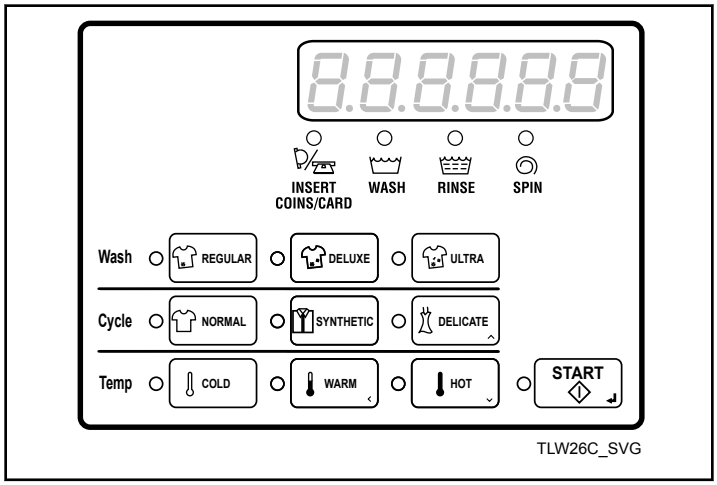

Figure 23

Indicator Lights

INSERT COINS/CARD	INSERT COINS/CARD is lit to prompt the user to insert payment to satisfy the vend price. When INSERT COINS/CARD is lit, the digits show the vend price remaining to be satisfied.
WASH	WASH is lit at the beginning of the Wash portion of the cycle and will remain lit until the wash step is complete.
RINSE	RINSE is lit at the beginning of the Rinse or Extra Rinse portion of the cycle and will remain lit until the Rinse step is complete.
SPIN	SPIN is lit during the Final Spin portion of the cycle.
START	START flashes one second on and one second off when the full vend price has been satisfied.

Table continues...

© Copyright, Alliance Laundry Systems LLC - DO NOT COPY or TRANSMIT

Maintenance

User-Maintenance Instructions

Cold Weather Care

If the unit is delivered on a cold day (below freezing), or is stored in an unheated room or area during the cold months, do not attempt to operate the washer until it has had a chance to warm up. Water from the previous cycle may remain.

Care of Your Washer

Use only a damp or sudsy cloth for cleaning the control panel. Some cleaning products may harm the finish on the control panel or damage the interior. DO NOT use products that contain alcohol on the control panel. Wipe the panel dry after cleaning.

Wipe the washer cabinet as needed. If detergent, bleach or other washing products are spilled on the cabinet, wipe immediately. Some products will cause permanent damage if spilled on the cabinet.

Do not use scouring pads or abrasive cleansers on control panel or cabinet.

Leave the lid open to allow the inside of the washer to dry out after use. This helps prevent musty odors from developing.

The agitator should not be removed except for service. The washtub is designed to be self cleaning, though it may need rinsing or wiping after some unusual loads have been washed. This may also be necessary if too little detergent has been used.

Replacing Hoses

Hoses and other rubber parts deteriorate after extended use. Hoses may develop cracks, blisters or material wear from the temperature and constant high pressure they are subjected to.

All hoses should be checked on a monthly basis for any visible signs of deterioration. Any hose showing the signs of deterioration listed above should be replaced immediately. All hoses should be replaced every five years.

Filter Screens

Check the filter screens in the fill hoses for debris or damage every six months. Clean or replace them if necessary.

If the washer is filling with water slower than normal, check the filter screens. Clean or replace them if necessary.

Order filter screen Part No. 803615 from the nearest authorized parts distributor.

Laundry IQ (Select Models)

In the case that the Laundry IQ device detects a condition that requires machine maintenance, the owner will receive a notification on https://laundryIQ.alliancelaundry.com.

Reinstallation of Shipping Materials

You must install the shipping brace and shipping plug any time the washer is moved.

Shipping Brace

The shipping brace in the lid opening should be saved and reinstalled whenever the washer is moved. To reinstall the brace, open the washer lid and place the brace over the washer agitator, placing the back of the brace into the lid opening first.

Shipping Plug

The plastic shipping plug should be saved and reinstalled any time the washer is moved. The plug fits into two openings: The base opening and the shipping plug opening on the bottom of the movable pivot dome. The plug MUST be inserted into both openings to prevent damage to the washer. In order to accomplish this, the shipping plug opening must be directly lined up with the base opening.

Refer to *Figure 24* .

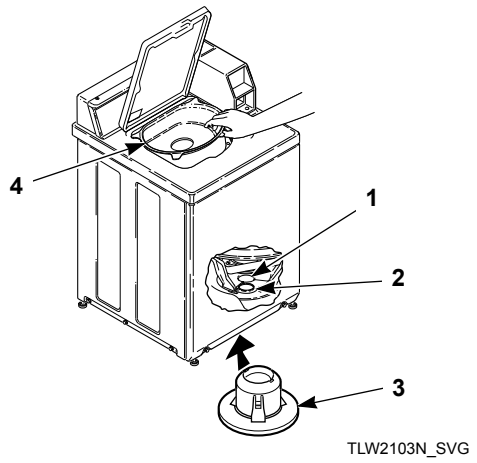

1. Shipping Plug Opening
2. Base Opening
3. Shipping Plug
4. Shipping Brace

Figure 24

Motor Overload Protector

The internal overload protector will stop the motor automatically in the event of an overload.

The overload protector will reset itself in two or three minutes and the motor will restart automatically.

© Copyright, Alliance Laundry Systems LLC - DO NOT COPY or TRANSMIT

If the overload protector stops motor again, remove the washer from use and call the service person to correct the problem.

© Copyright, Alliance Laundry Systems LLC -
DO NOT COPY or TRANSMIT

Troubleshooting

Try these troubleshooting tips before making a service call. They may save you time and money.

Washer Symptom	Possible Cause/Solution
Won't Fill	• Make sure lid is closed. • Make sure power cord is plugged all the way into the electrical outlet. • Check the laundry room fuse or circuit breaker. • Insert coin(s) or card. • Make sure that the controls are properly set. • Make sure hot and cold water faucets are turned on. • Make sure drain hose is not kinked or twisted. • During the rinse portion of the cycle, the tub won't fill with water. Instead, there is a spray rinse. • Make sure that the last spin has been completed. • Clean the screens in the water mixing valve and the filter screens located at the faucet end of the fill hoses. (Owner is responsible for service calls regarding cleaning of the screens.) • Water is being siphoned from the washer during the cycle. Refer to the Installation instructions to make sure that the drain hose has been properly installed. • The motor overload protector may have stopped the cycle. It will reset itself in two or three minutes and restart the washer automatically.
Won't Start	• Make sure lid is closed. • Make sure power cord is plugged all the way into the electrical outlet. • Check the laundry room fuse or circuit breaker. • Insert coin(s) or card. • Make sure that the controls are properly set. • The motor overload protector may have stopped the cycle. It will reset itself in two or three minutes and restart the washer automatically.
Won't Agitate	• Make sure lid is closed. • Make sure power cord is plugged all the way into the electrical outlet. • Check the laundry room fuse or circuit breaker. • Insert coin(s) or card. • The motor overload protector may have stopped the cycle. It will reset itself in two or three minutes and restart the washer automatically. • Broken drive belt. Call the service person. • Have a qualified electrician check polarity and earth/ground. Refer to Electrical Requirements section.

Table continues...

© Copyright, Alliance Laundry Systems LLC - DO NOT COPY or TRANSMIT

Washer Symptom	Possible Cause/Solution
Won't Spin	• Make sure lid is closed. • Make sure power cord is plugged all the way into the electrical outlet. • Check the laundry room fuse or circuit breaker. • Insert coin(s) or card. • The motor overload protector may have stopped the cycle. It will reset itself in two or three minutes and restart the washer automatically. • Broken drive belt. Call the service person. • Have a qualified electrician check polarity and earth/ground. Refer to Electrical Requirements section.
Stops/Pauses During Cycle	• Pauses are part of the washer's normal operation. The washer will stop (pause) shortly before the wash and rinse spins. • Check the laundry room fuse or circuit breaker. • The motor overload protector may have stopped the cycle. It will reset itself in two or three minutes and restart the washer automatically.
Won't Drain	• Make sure drain hose is not kinked or twisted. • Make sure drain hose is not clogged. • Make sure drain receptacle is not clogged. • Refer to the Installation instructions to make sure that the drain hose has been properly installed.
Water Leaks	• Check that fill hoses are properly installed on the faucets and the washer's water mixing valve. • Check the condition of the fill hoses. Replace fill hoses every five years. • Make sure drain receptacle is not clogged. • Check laundry room plumbing. • Laundry load may be oversudsing or overloaded. Use less detergent (or low-sudsing detergent) and proper load sizes.
Is Noisy	• Wash load may be unbalanced. Open lid and redistribute the load. • Make sure washer is level. Uneven leveling can cause vibration. • A newly installed washer may make a knocking sound if the machine has been in storage. The belt may have settled. Run washer through 4-5 cycles to loosen belt. Washer operation will not be affected.
Load is too Wet	• Wash load may be unbalanced. Open lid and redistribute the load. • Load is too small. Add items to make full load.
Wrong Water Temperature	• Make sure that the controls are properly set. • Check fill hoses. Make sure hot faucet hose is connected to hot mixing valve (indicated with "H" on the valve bracket) and cold faucet is connected to cold mixing valve (indicated with "C" on the valve bracket). • Make sure laundry room water heater is adjusted properly.

© Copyright, Alliance Laundry Systems LLC -
DO NOT COPY or TRANSMIT

Contact Information

If service is required, contact the nearest Factory Authorized Service Center.

If you are unable to locate an authorized service center or are unsatisfied with the service performed on your unit, contact:

Alliance Laundry Systems
Shepard Street
P.O. Box 990
Ripon, WI 54971-0990
www.alliancelaundry.com
Phone: +1 (920) 748-3121

If replacement parts are required, contact the source from where you purchased your unit or call us at the number listed in this section for the name and address of the nearest authorized parts distributor.

NOTE: For questions related to Laundry IQ, refer to https://laundryIQ.alliancelaundry.com for service contact information.

When calling or writing about your unit, PLEASE GIVE THE MODEL AND SERIAL NUMBERS. The model and serial numbers are located on the serial plate. The serial plate will be in the location shown in *Figure 25* .

Date Purchased	
Model Number	
Serial Number	

Please include a copy of your bill of sale and any service receipts you have.

WARNING

To reduce the risk of serious injury or death, DO NOT repair or replace any part of the unit or attempt any servicing unless specifically recommended in the user-maintenance instructions or in published user-repair instructions that you understand and have the skills to carry out.

W329

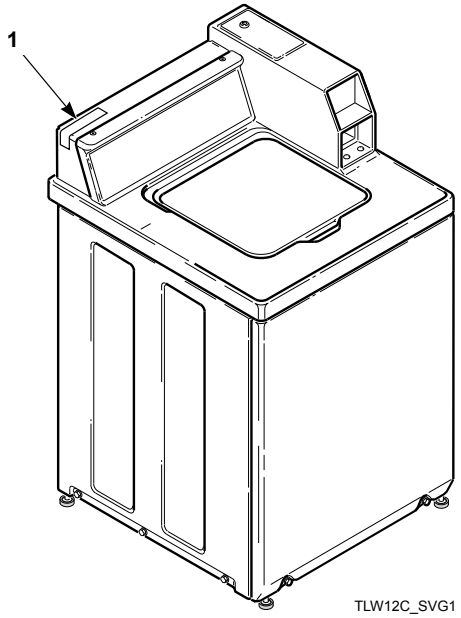

1. Serial Plate

Figure 25

© Copyright, Alliance Laundry Systems LLC - DO NOT COPY or TRANSMIT

Installer Checklist

Fast Track for Installing the Washer

1	Remove Shipping Brace and Shipping Plug.	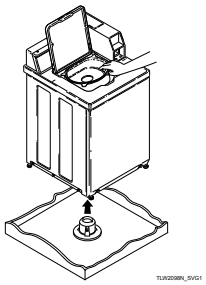	6	Plug In Washer.	
	CHECK			CHECK	
2	Wipe Out Inside of Washer.	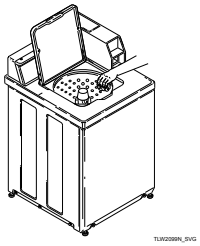	7	Add Water to Washer.	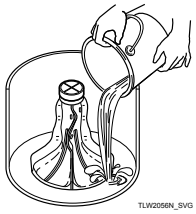
	CHECK			CHECK	
3	Connect Fill Hoses.	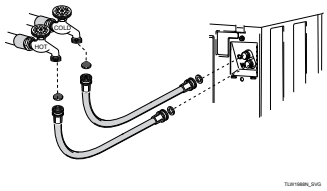	8	Check Lid Switch.	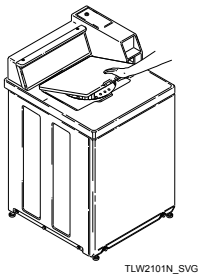
	CHECK			CHECK	
4	Connect Drain Hose to Drain Receptacle.	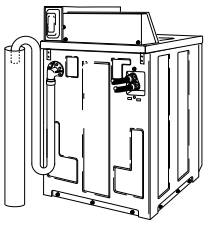	9	Connect Laundry IQ to Gateway (Select Models).	
	CHECK			CHECK	
5	Position and Level Washer.	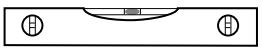			
	CHECK	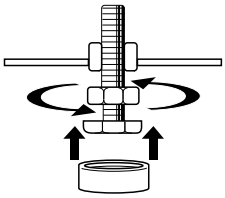			

Refer to the manual for more detailed information.

© Copyright, Alliance Laundry Systems LLC - DO NOT COPY or TRANSMIT