California Faucets®

Davoli®

Bridge Kitchen Faucet

K10-120-XX

Features

- *25+ artisanal finished including 12 PVD finishes*
- *All brass construction*
- *Spout rotates 360°*
- *2-hole deck mount installation*
- *Flexible braided hoses for ease of installation*
- *1/4 turn ceramic disc cartridge(s)*
- *1.8 gpm (6.8 L/min) max flow rate*

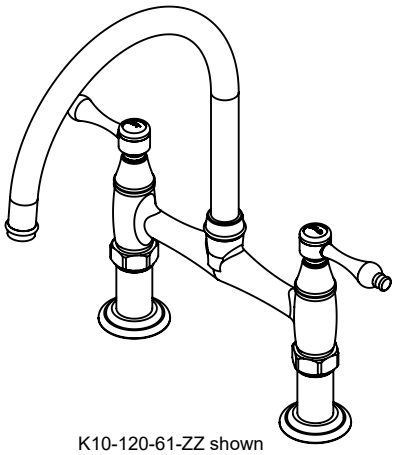

K10-120-61-ZZ shown

Codes/Standards Applicable

Product meets or exceeds the following:

- *ASME A112.18.1/CSA B125.1*
- *NSF 61, NSF 372, CEC & DOE*
- *Commonwealth of MA*
- *ADA compliant (with lever handles)*

Through-Hole Specifications			
	Min	Recommended	Max
Faucet:	∅1-1/8" [29]	∅1-3/8" [35mm]	∅1-3/8" [35mm]

Handle Style	A	B
33	3-7/16" [88]	7-1/2" [190]
34	1-1/8" [29]	7-13/16" [199]
35	3-1/2" [89]	7-1/2" [190]
48	3-1/8" [79]	7-5/16" [185]
48X	1-1/2" [38]	7-5/16" [185]
60	1-1/4" [32]	7-1/2" [190]
61	3-1/8" [80]	7-1/2" [190]
61XD	1-3/8" [35]	7-13/16" [198]

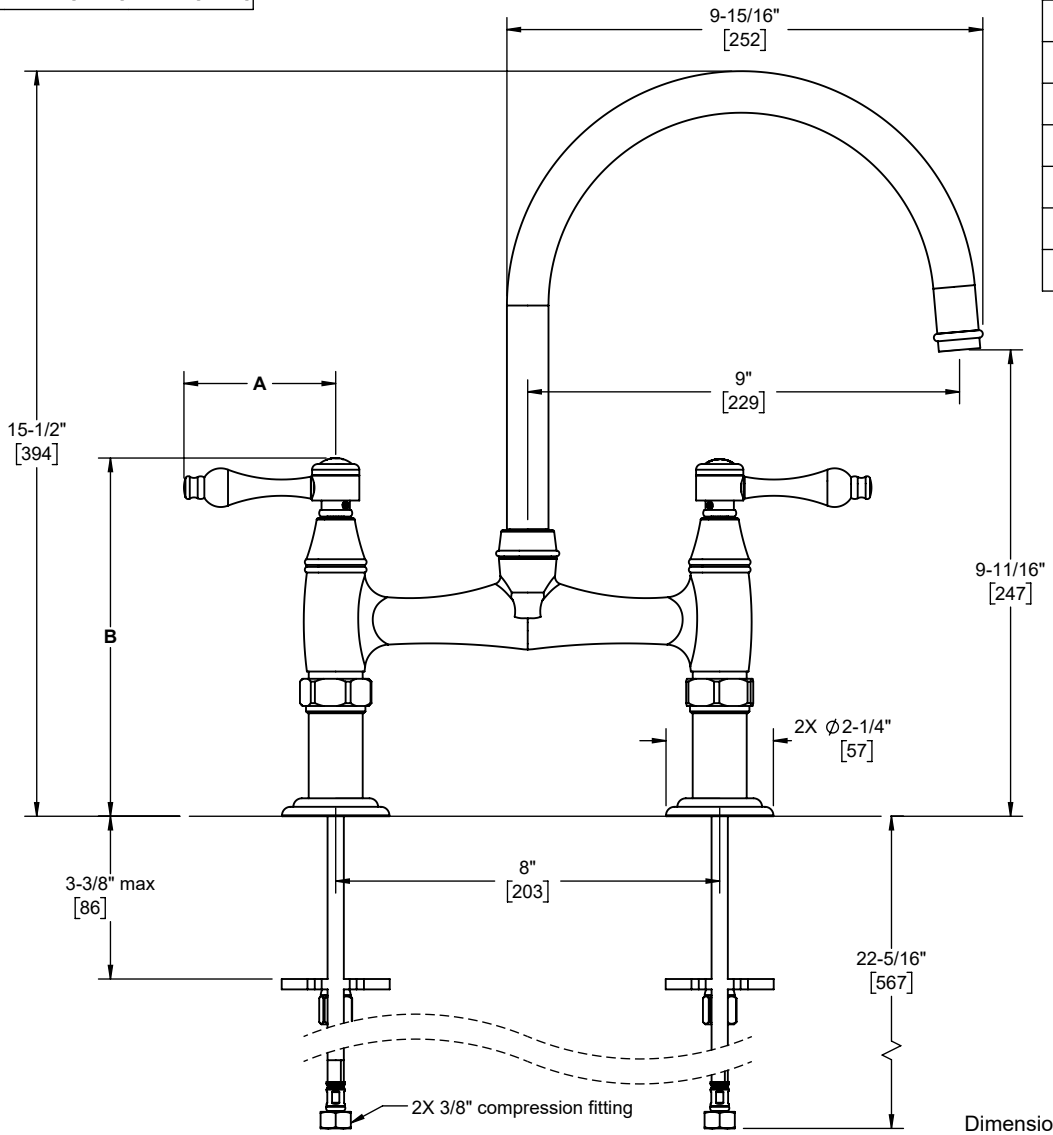

Specifications subject to change without notice

Dimensions are inches, rounded to 1/16"
[Dimensions in brackets are mm, rounded to 1mm]