NOTES:

1. TO INSPECT ASSEBMLY, FOLLOW FIRST ARTICLE AND IN PROCESS INSPECTION SHEET.

BILL OF MATERIAL (CURRENT LEVEL)

ITEM	PT/ASSY	DESCRIPTION	TYPE	QTY.
1	11XXD	SOLID MOUNTING BRACKET	PART	2
2	1-206	HARDWARE PACK	ASSEMBLY	2
3	1100C	TOWEL SHELF ROSETTE	PART	2
4	40868	DOUBLE TOWEL BAR POST - LEFT	PART	1
5	40869	DOUBLE TOWEL BAR POST - RIGHT	PART	1
6	92308	SCRW, M5 X 5 SKT HD CUP PT W/ SELF LOC SS	PART	2
7	91020	O-RING, #2-016, EPDM, 65-75 DURO, NSF 61	PART	4
8	10888	HEX KEY, 2.5MM ALLOY STEEL	PART	1
9	40867	32 IN. TOWEL BAR	PART	2

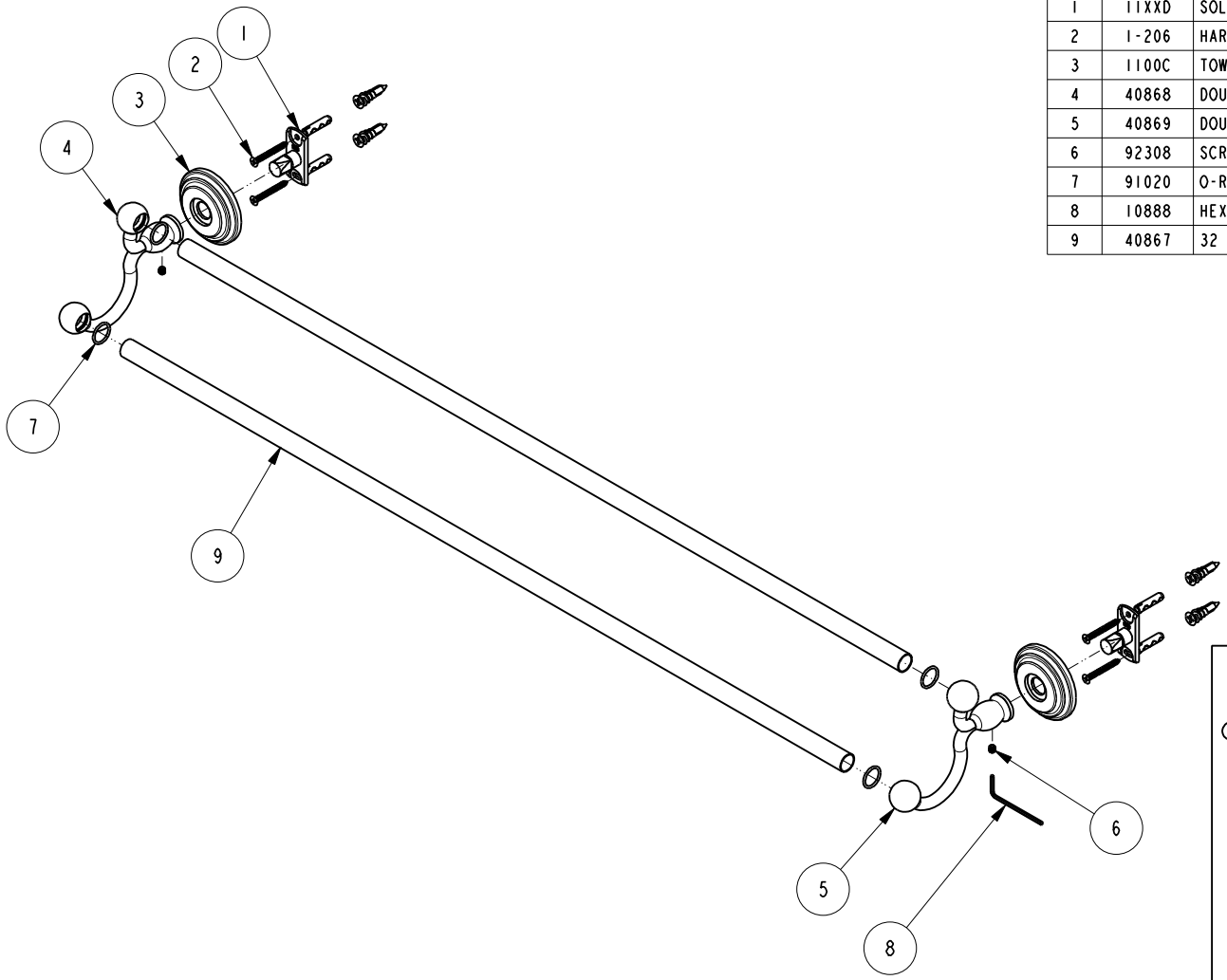

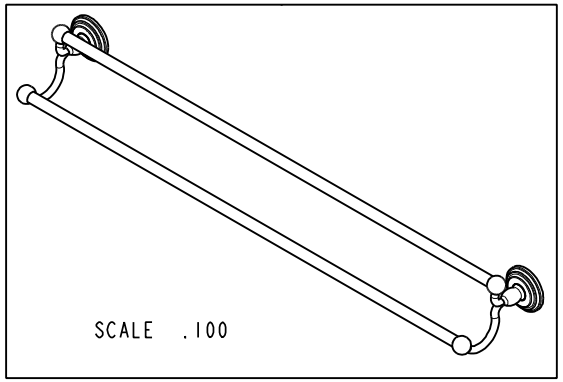

ZONE	REV	DESCRIPTION	DATE	APPROVED
-	-	EN-4378	07/15/21	R.S.

COPYRIGHT 2005 BRASSTECH, INC. THESE DRAWINGS AND THE DESIGNS DEPICTED HEREIN ARE THE PROPRIETARY PROPERTY OF BRASSTECH. ANY USE OR REPRODUCTION IS SUBJECT TO THE EXPRESS APPROVAL OF BRASSTECH. UNAUTHORIZED USE IS STRICTLY PROHIBITED. ALL RIGHTS RESERVED.

		-	-
TESTING	-	-	-
ASSEMBLY	-	-	-
PLATING	-	-	-
POLISHING	-	NEXT ASSY	USED ON
MACHINING	-	APPLICATION	
TOOLING FIXTURE #		REMOVE ALL BURRS AND SHARP EDGES	

UNITS ARE: INCHES [MM]
TOLERANCES ARE:
FRACTIONS ±1/16" DECIMALS .X ±.1 [2,5] .XX ±.06 [1,5] ANGLES ±1°
(X.XXX) DENOTES CRITICAL DIMS.
ALL THREADS ARE CRITICAL

DRAWN	JINSON	07/15/21
CHECKED	R.S.	07/15/21
APPROVED	R.S.	07/15/21

BRASSTECH INCORPORATED
2001 CARNEGIE AVE.
SANTA ANA, CA 92705
(949) 417-5207

32" DOUBLE TOWEL BAR

DWG NO. 1122-32 REV -

SCALE .250 REF. - SHEET 1 OF 2

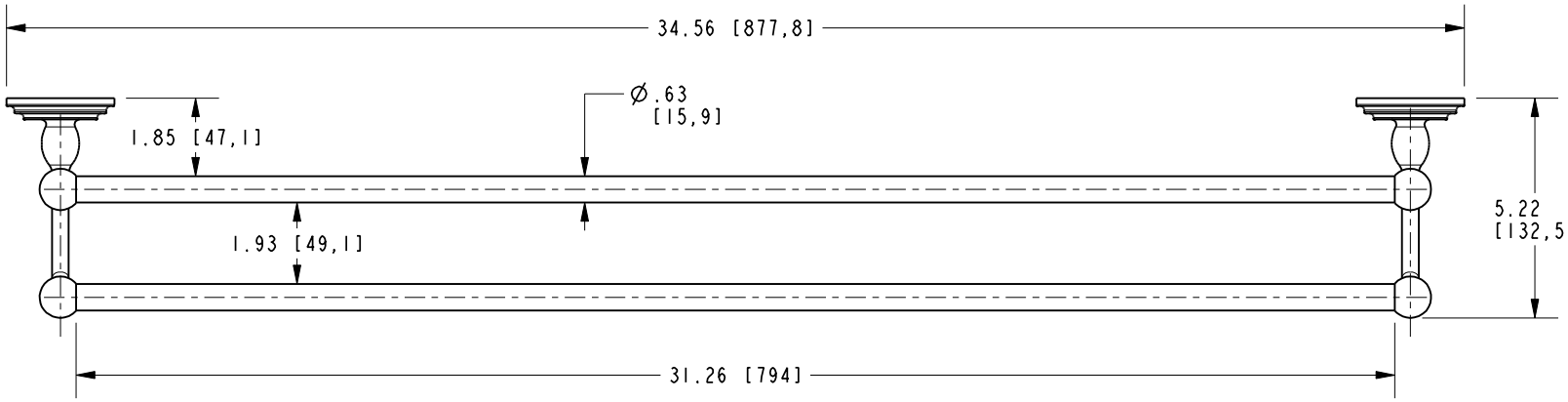

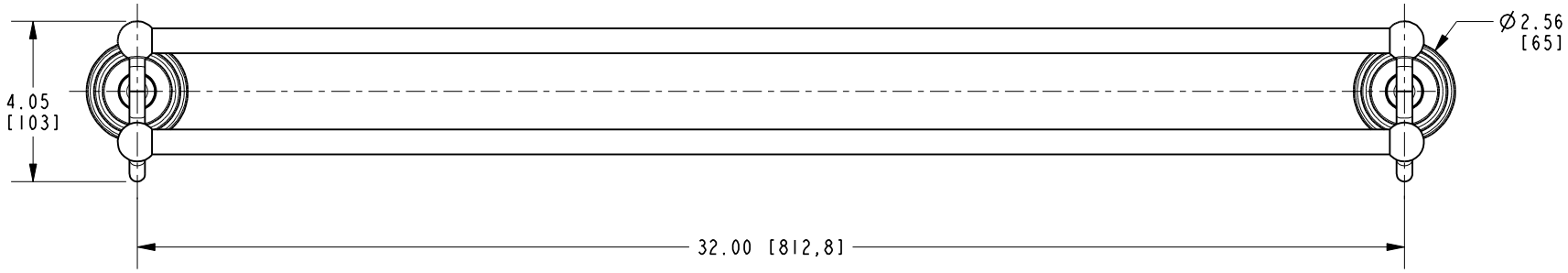

BRASSTECH INCORPORATED
2001 E. CARNEGIE AVE.
SANTA ANA, CA 92705
(949) 417-5207

DWG NO.	REV
1122-32	-

SCALE	REF.	SHEET
.375	-	2 OF 2