VAIA Two-hole bridge mixer For sprayer / professional sprayer - Brushed Durabrass (23kt Gold)

VAIA

19 815 809 Product version from 7/1/2023



- 9-1/2" Projection
- Swiveling spout 360°
- Aerated stream
- Water flow rate limited to max. 1.5 gpm
- lead-free
- This product can help a building meet the requirements of Green Building Rating Systems, e.g. LEED®, BREEAM®, DGNB

Two-hole mixer for use with rinsers and professional sprayers

Brushed Durabrass (23kt Gold)	19 815 809-28 0010
Chrome	19 815 809-00 0010
Brushed Platinum	19 815 809-06 0010
Platinum	19 815 809-08 0010
Durabrass (23kt Gold)	19 815 809-09 0010
Dark Chrome	19 815 809-19 0010
Matte Black	19 815 809-33 0010
Brushed Dark Brass (PVD)	19 815 809-39 0010
Brushed Bronze (PVD)	19 815 809-42 0010
Brushed Champagne (22kt Gold)	19 815 809-46 0010
Champagne (22kt Gold)	19 815 809-47 0010
Brushed Chrome	19 815 809-93 0010
Brushed Dark Platinum	19 815 809-99 0010

Recommended article



VAIA Soap dispenser with flange - Brushed Durabrass (23kt Gold) 82 434 809-28

Recommended article

VAIA AIR SWITCH operating button, trim parts only - Brushed Durabrass (23kt Gold) 10 713 809-28

DORN BRACHT

VAIA Two-hole bridge mixer For sprayer / professional sprayer - Brushed Durabrass (23kt Gold)

19 815 809 Product version from 7/1/2023

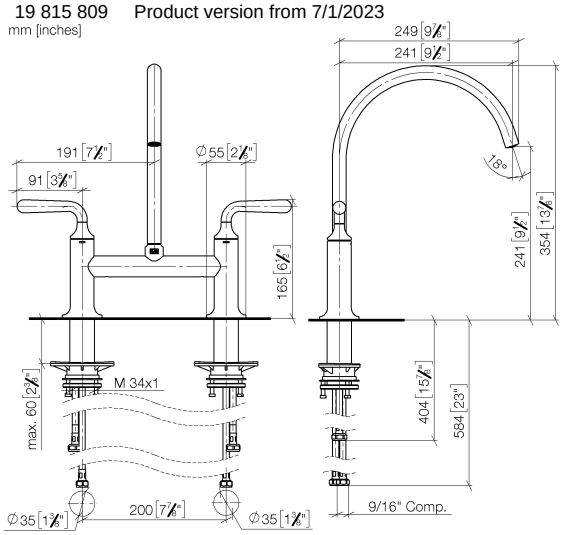

Codes & Standards

ASME A112.18.1	California Energy Commission (CEC)	cUPC	NSF372
NSF61			

Certificates and sustainability

IAPMO_N-4976	IAPMO_6397	IAPMO_4976 (

VAIA Two-hole bridge mixer For sprayer / professional sprayer - Brushed Durabrass (23kt Gold)

19 815 809 Product version from 7/1/2023

Parts for other finishes can be found here: Chrome

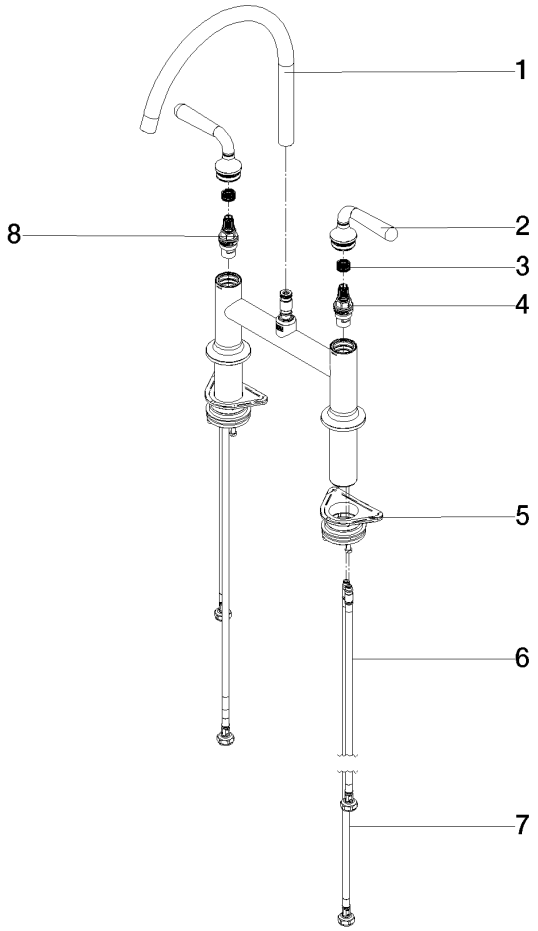

Spare parts list

Number	Item Number	Designation	Number of units	Lead time
7	04 30 04 103 00 90	hose	2.00	14
4	90 90 03 130 00 90	top	1.00	14
2	90 20 80 057 00-28	handle	2.00	54
3	90 12 12 232 00 90	fixing cap	2.00	14
5	04 30 11 040 00 90	fixing set	2.00	14
6	04 30 04 100 00 90	hose	2.00	14
1	90 28 22 396 01-28	spout	1.00	54
8	90 90 03 131 00 90	top	1.00	14