VAIA Three-hole bridge mixer Pull-down with spray function - Platinum

VAIA

19 870 809 Product version from 7/1/2023



- 9-1/2" Projection
- Swiveling spout 360°
- Optional restricted swivel available with swivel limiter set 12 823 970 90
- Aerated stream and spray mode
- Total height 15-1/2"
- 8" height to aerator/spout outlet
- 1-3/8" hole diameter
- 2 x pressure hose with 3/8” compression fitting
- 59" metal shower hose
- Sprayface with descaling system
- Water flow rate limited to max. 1.5 gpm
- lead-free
- Spray types can be changed while the water is running
- This product can help a building meet the requirements of Green Building Rating Systems, e.g. LEED®, BREEAM®, DGNB

(ADA)

Internal backflow preventer.

Switch back and forth between aerator and spray mode while water is running.

Platinum	19 870 809-08 0010
Chrome	19 870 809-00 0010
Brushed Platinum	19 870 809-06 0010
Durabrass (23kt Gold)	19 870 809-09 0010
Dark Chrome	19 870 809-19 0010
Brushed Durabrass (23kt Gold)	19 870 809-28 0010
Matte Black	19 870 809-33 0010
Brushed Dark Brass (PVD)	19 870 809-39 0010
Brushed Bronze (PVD)	19 870 809-42 0010
Brushed Champagne (22kt Gold)	19 870 809-46 0010
Champagne (22kt Gold)	19 870 809-47 0010
Brushed Chrome	19 870 809-93 0010
Brushed Dark Platinum	19 870 809-99 0010

Recommended article



Swivel limiter set - 12 823 970 90

Recommended article

VAIA AIR SWITCH operating button, trim parts only - Platinum 10 713 809-08

Recommended article



VAIA Soap dispenser with flange - Platinum 82 434 809-08

VAIA Three-hole bridge mixer Pull-down with spray function - Platinum

19 870 809 Product version from 7/1/2023

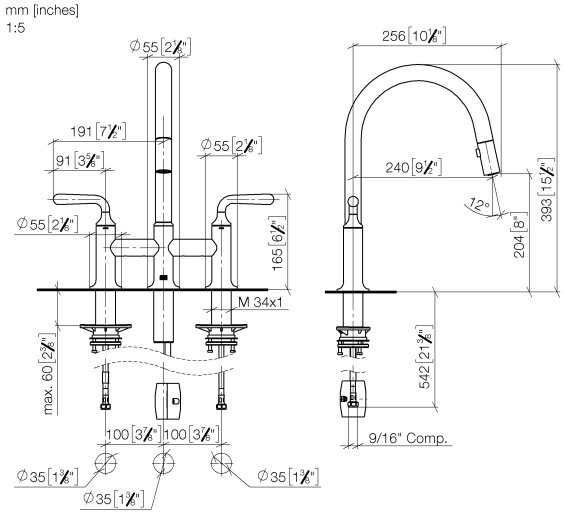

Codes & Standards

ADA	ASME A112.18.1	California Energy Commission (CEC)	cUPC
NSF372	NSF61		

Certificates and sustainability

IAPMO_4976 IAPMO_N-4976 IAPMO_6397

DORN BRACHT

VAIA Three-hole bridge mixer Pull-down with spray function - Platinum

19 870 809 Product version from 7/1/2023

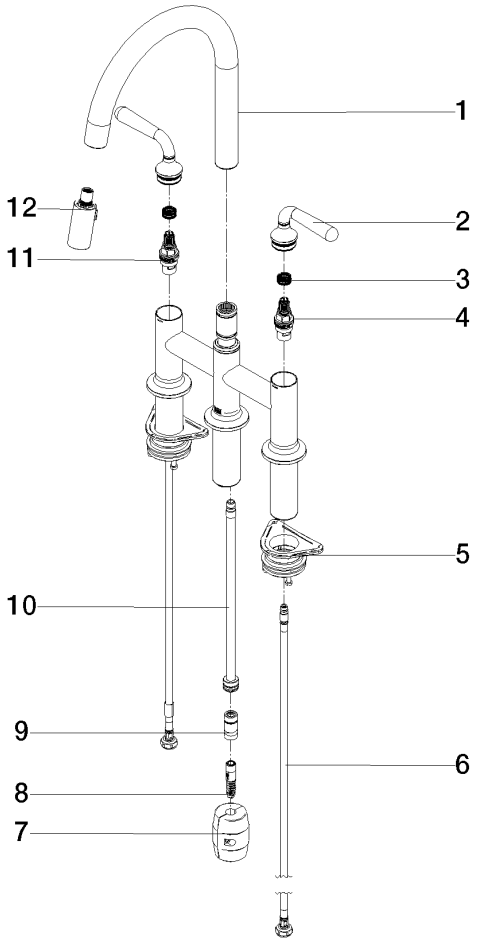

Spare parts list

Number	Item Number	Designation	Number of units	Lead time
5	04 30 11 040 00 90	fixing set	2.00	14
4	90 90 03 130 00 90	top	1.00	14
6	04 30 04 103 00 90	hose	2.00	14
2	90 20 80 057 00-08	handle	2.00	54
1	90 28 22 397 00-08	spout	1.00	54
3	90 12 12 232 00 90	fixing cap	2.00	14
7	04 21 50 010 00 90	accessories	1.00	14
8	04 30 02 120 00-85	hose	1.00	26
12	90 18 40 317 00-08	shower	1.00	54
11	90 90 03 131 00 90	top	1.00	14
9	90 24 03 253 00 90	adaptor	1.00	14
10	04 28 20 067 00 90	pipe	1.00	14