# VAIA Three-hole bridge mixer Pull-down with spray function - Brushed Platinum

VAIA

19 875 809 Product version from 7/1/2023



- 9-1/2" Projection
- Swiveling spout 360°
- Optional restricted swivel available with swivel limiter set 12 823 970 90
- Aerated stream and spray mode
- Total height 15-1/2"
- 8" height to aerator/spout outlet
- 1-3/8" hole diameter
- 2 x pressure hose with 3/8” compression fitting
- 59" metal shower hose
- Sprayface with descaling system
- Water flow rate limited to max. 1.5 gpm
- lead-free
- Spray types can be changed while the water is running
- This product can help a building meet the requirements of Green Building Rating Systems, e.g. LEED®, BREEAM®, DGNB

(ADA)

Internal backflow preventer.

Switch back and forth between aerator and spray mode while water is running.

| | |
|---|---|
| Brushed Platinum | 19 875 809-06 0010 |
| Chrome | 19 875 809-00 0010 |
| Platinum | 19 875 809-08 0010 |
| Durabrass (23kt Gold) | 19 875 809-09 0010 |
| Dark Chrome | 19 875 809-19 0010 |
| Brushed Durabrass (23kt Gold) | 19 875 809-28 0010 |
| Matte Black | 19 875 809-33 0010 |
| Brushed Dark Brass (PVD) | 19 875 809-39 0010 |
| Brushed Bronze (PVD) | 19 875 809-42 0010 |
| Brushed Champagne (22kt Gold) | 19 875 809-46 0010 |
| Champagne (22kt Gold) | 19 875 809-47 0010 |
| Brushed Chrome | 19 875 809-93 0010 |
| Brushed Dark Platinum | 19 875 809-99 0010 |

## Recommended article



**Swivel limiter set -** 12 823 970 90

## Recommended article



**Swivel limiter set -** 12 823 970 90

## Recommended article



**VAIA Soap dispenser with flange - Brushed Platinum** 82 434 809-06

## Recommended article



**VAIA AIR SWITCH operating button, trim parts only - Brushed Platinum** 10 713 809-06

DORN BRACHT

# VAIA Three-hole bridge mixer Pull-down with spray function - Brushed Platinum

VAIA

19 875 809 Product version from 7/1/2023

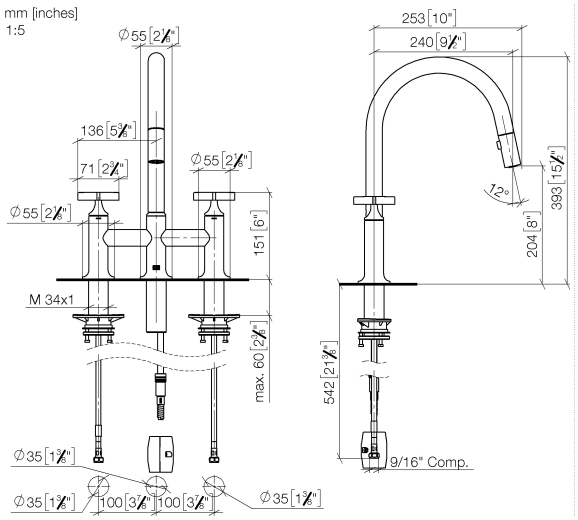


## Codes & Standards

| | | | |
|---|---|---|---|
| ADA | ASME A112.18.1 | California Energy Commission (CEC) | cUPC |
| NSF372 | NSF61 | | |

## Certificates and sustainability

IAPMO_4976 IAPMO_N-4976 IAPMO_6397

DORN BRACHT

# VAIA Three-hole bridge mixer Pull-down with spray function - Brushed Platinum



19 875 809 Product version from 7/1/2023

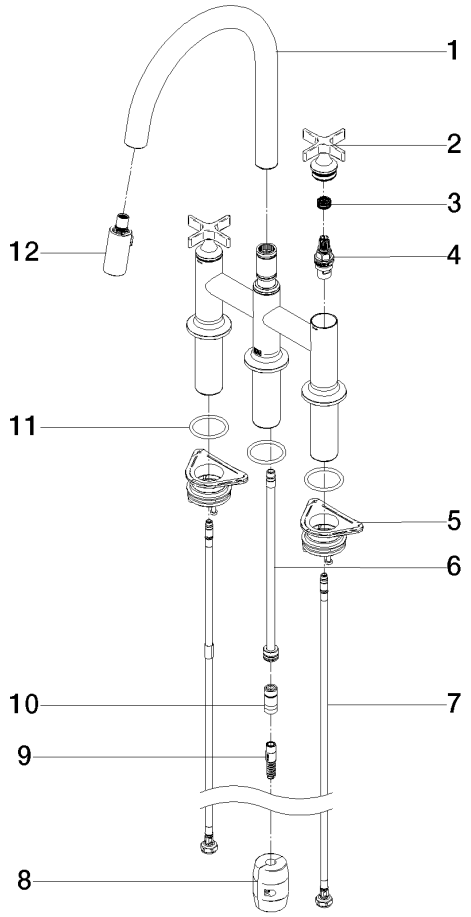


## Spare parts list

| Number | Item Number | Designation | Number of units | Lead time |
|---|---|---|---|---|
| 7 | 04 30 04 103 00 90 | hose | 2.00 | 14 |
| 2 | 90 20 80 036 00-06 | handle | 2.00 | 26 |
| 4 | 90 90 03 131 00 90 | top | 2.00 | 14 |
| 8 | 04 21 50 010 00 90 | accessories | 1.00 | 14 |
| 1 | 90 28 22 397 00-06 | spout | 1.00 | 26 |
| 6 | 04 28 20 067 00 90 | pipe | 1.00 | 14 |
| 10 | 90 24 03 253 01 90 | adaptor | 1.00 | 14 |
| 5 | 04 30 11 040 00 90 | fixing set | 2.00 | 14 |
| 3 | 90 12 12 232 00 90 | fixing cap | 2.00 | 14 |
| 9 | 04 30 02 120 00-06 | hose | 1.00 | - |
| | Spare part can no longer be ordered, please order the replacement item | | | |
| 12 | 90 18 40 317 00-06 | shower | 1.00 | 26 |
| 11 | 90 14 10 043 00 90 | seal | 3.00 | 14 |