mm
[inch]

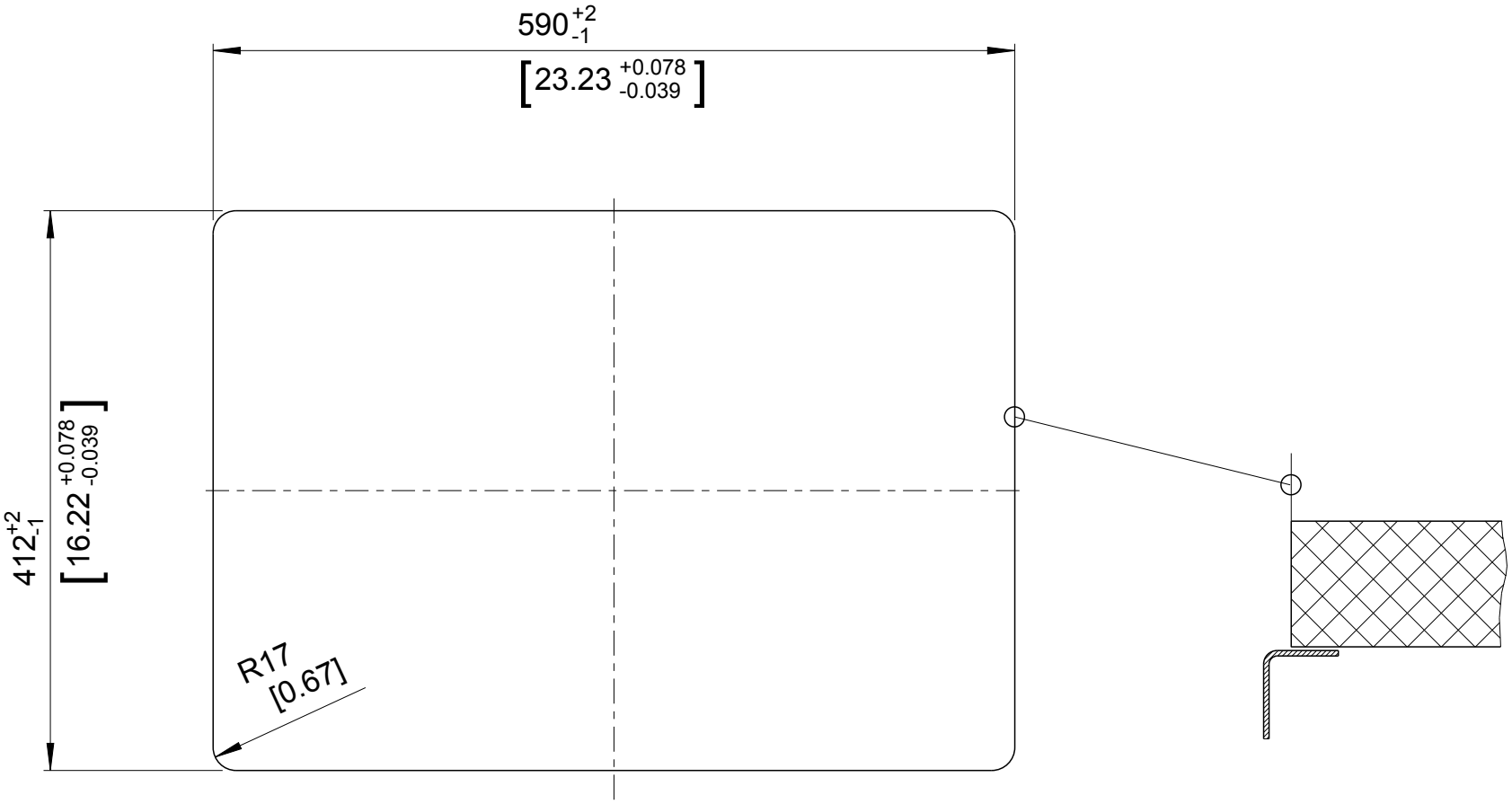

BLANCO	AS BLANCO CUVEE U MEDIUM SINGLE			Änderungen vorbehalten. Aktuellste Version im Internet. Subject to modifications. Latest version on the internet.	
	Edelstahl / Stainless steel	M 1:5	01/2018	cuvee_u_medium-single_s_up_s	1000350444