NEWPORT BRASS

CHESTERFIELD

KITCHEN BRIDGE PULL-DOWN FAUCET

1030-5463

Features

- Solid brass construction
- Brass valve bodies
- Quarter-turn washerless ceramic disc valve cartridges
- Swivel spout assembly with two-function, toggle-control spray engine
- Magnetic docking system secures spray engine to spout
- 8.28" (21.0 cm) spout height at outlet
- 8.58" (21.8 cm) spout reach (c-c)
- For 8" (20.3 cm) centers
- ADA compliant (Handles only)
- 1.8 GPM (6.8 LPM) Max

Codes / Standards Compliance

Meets or exceeds the following at date of manufacture:

- ASME A112.18.1/CAS B125.1
- IAPMO/cUPC
- NSF/ANSI/CAN 61, SECTION 9
- NSF/ANSI/CAN 372
- IPC
- ADA & ICC/ANSI A117.1 (Handle only)
- Energy Policy Act of 1992
- ASME A112.18.3 (Back flow) - Double check valves at sprayhead inlet
- All applicable US Federal and State material regulations

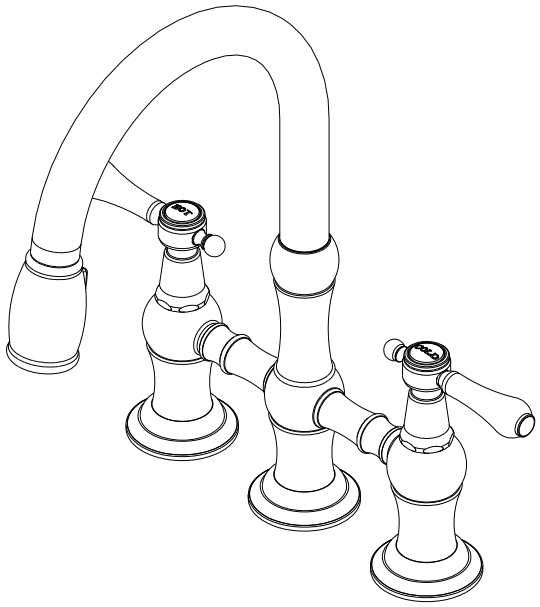

t: 949.417.5207 | www.newportbrass.com

NEWPORT BRASS

PRODUCT DIMENSIONS *(Units are in inches)*

Product Dimensions are provided for reference only. For specific product installation guidelines, please reference the Installation Instructions of the product being installed.

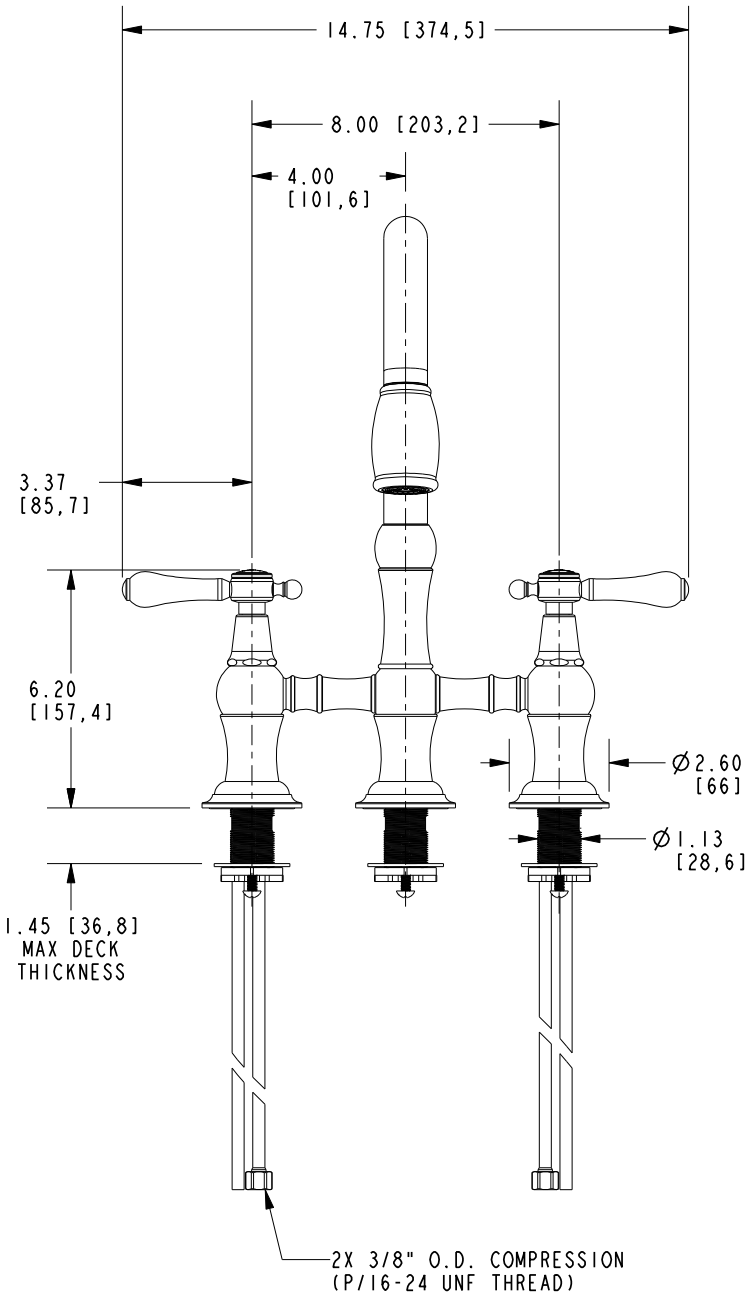

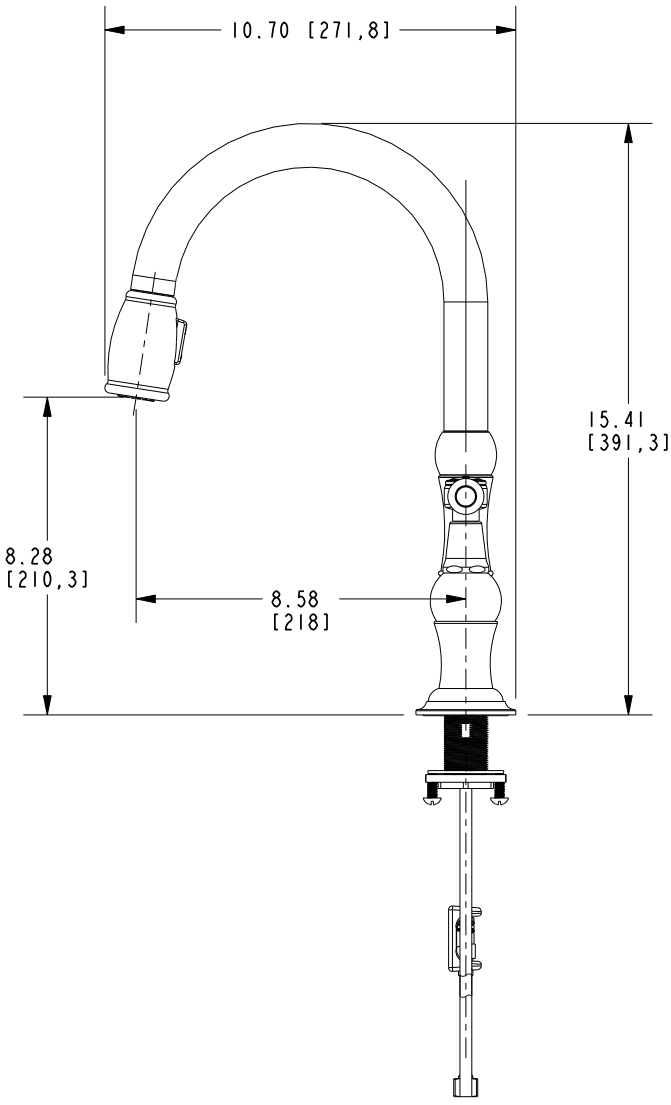

KITCHEN BRIDGE PULL-DOWN FAUCET

1030-5463

Newport Brass reserves the right (1) to make changes in specifications and materials, and (2) to change or discontinue models, both without notice or obligation. See current full-line price book or www.newportbrass.com for finish options and product availability.