NEWPORT BRASS

VALVES / MISC

BP SHOWER TRIM VALVE

1-684

Features

- Solid brass construction
- Provides anti-scald protection and temperature regulation
- Pressure-balancing technology maintains water temp. witin +/- 3 degrees Fahrenheit
- High-temperature safety stop to control maximum temperature
- Integrated hot and cold inlet stops ensure easy cartridge access
- 1-1/16" functional depth (center-back) enables back-to-back installation
- Max handle rotational requirement of 150 degrees to achieve max temp setting
- Require Newport Brass BP valve trim (sold separately)

Codes / Standards Compliance

Meets or exceeds the following at date of manufacture:

- ASME A112.18.1/CSA B125.1
- IAPMO/cUPC
- IPC
- ASSE 1016/ASME A112.1016
- All applicable US Federal and State material regulations

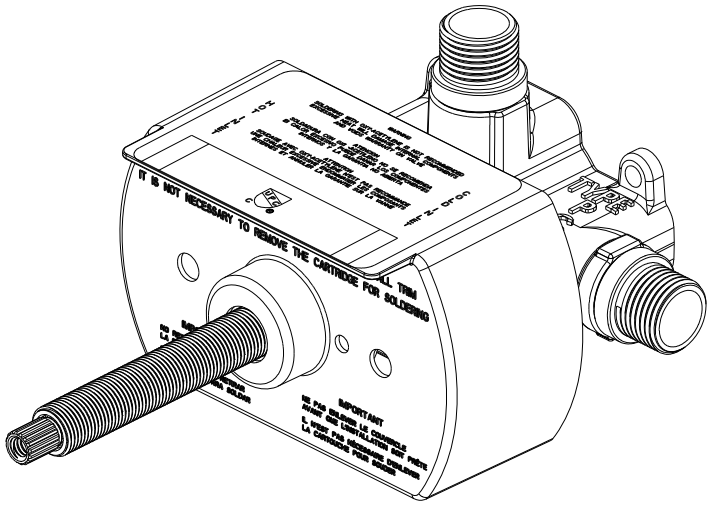

t: 949.417.5207 | www.newportbrass.com

NEWPORT BRASS

PRODUCT DIMENSIONS *(Units are in inches)*

Product Dimensions are provided for reference only. For specific product installation guidelines, please reference the Installation Instructions of the product being installed.

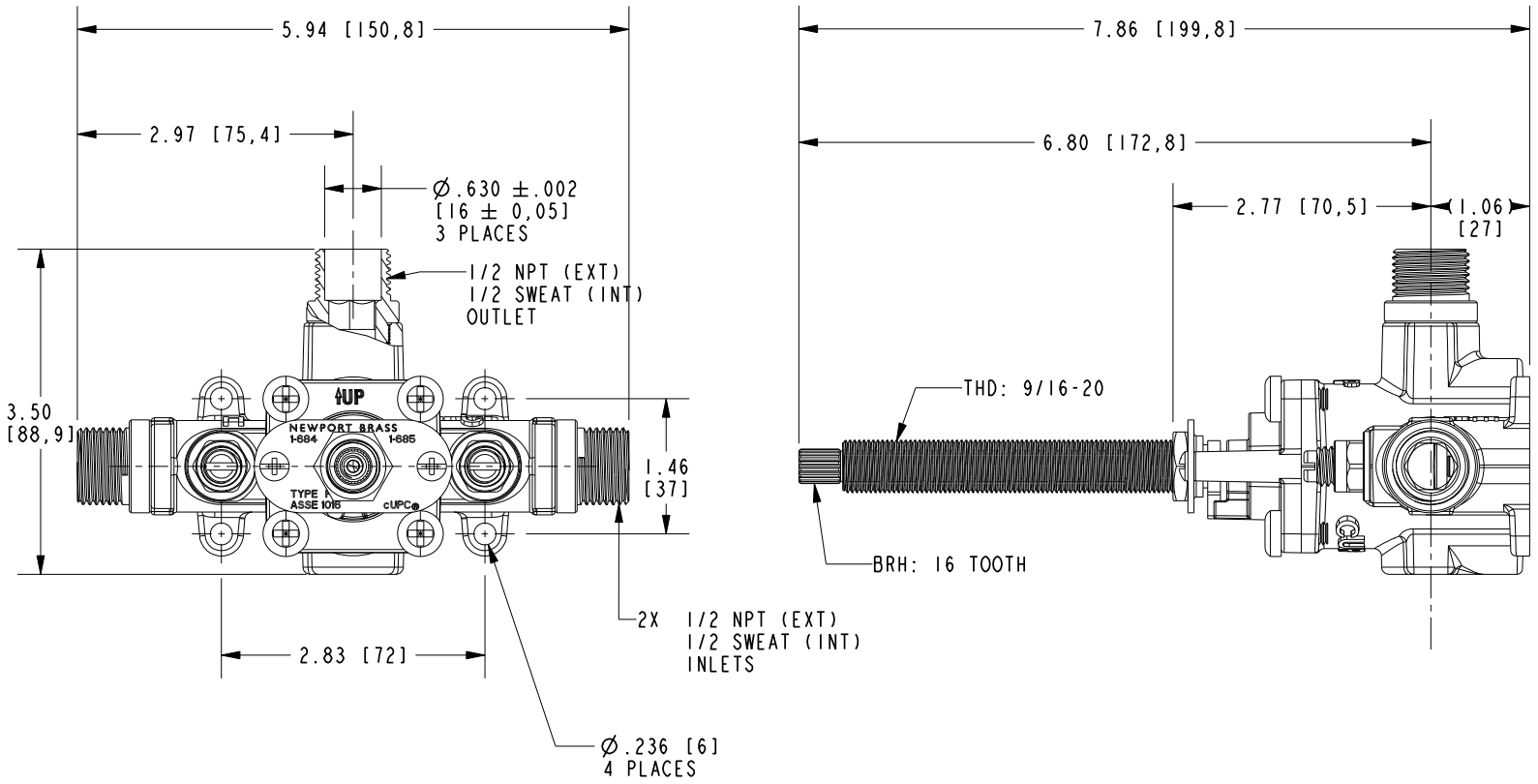

(MUD COVER IS HIDDEN IN ALL THE VIEWS)

BP SHOWER TRIM VALVE

1-684

Newport Brass reserves the right (1) to make changes in specifications and materials, and (2) to change or discontinue models, both without notice or obligation. See current full-line price book or www.newportbrass.com for finish options and product availability.