REPLACEMENT PARTS

ITEM	PT/ASSY	SPECIFY FINISH	DESCRIPTION
1	1-278		BP CARTRIDGE - STOP
2	1-280		BP-CARTRIDGE
3	91646		O-RING, #2-214, E3609 SHORE A70
4	1-281		VALVE COVER ASM
5	1-283		STEM PLATE ASM
6	1-074		STEM KIT - BP VALVE

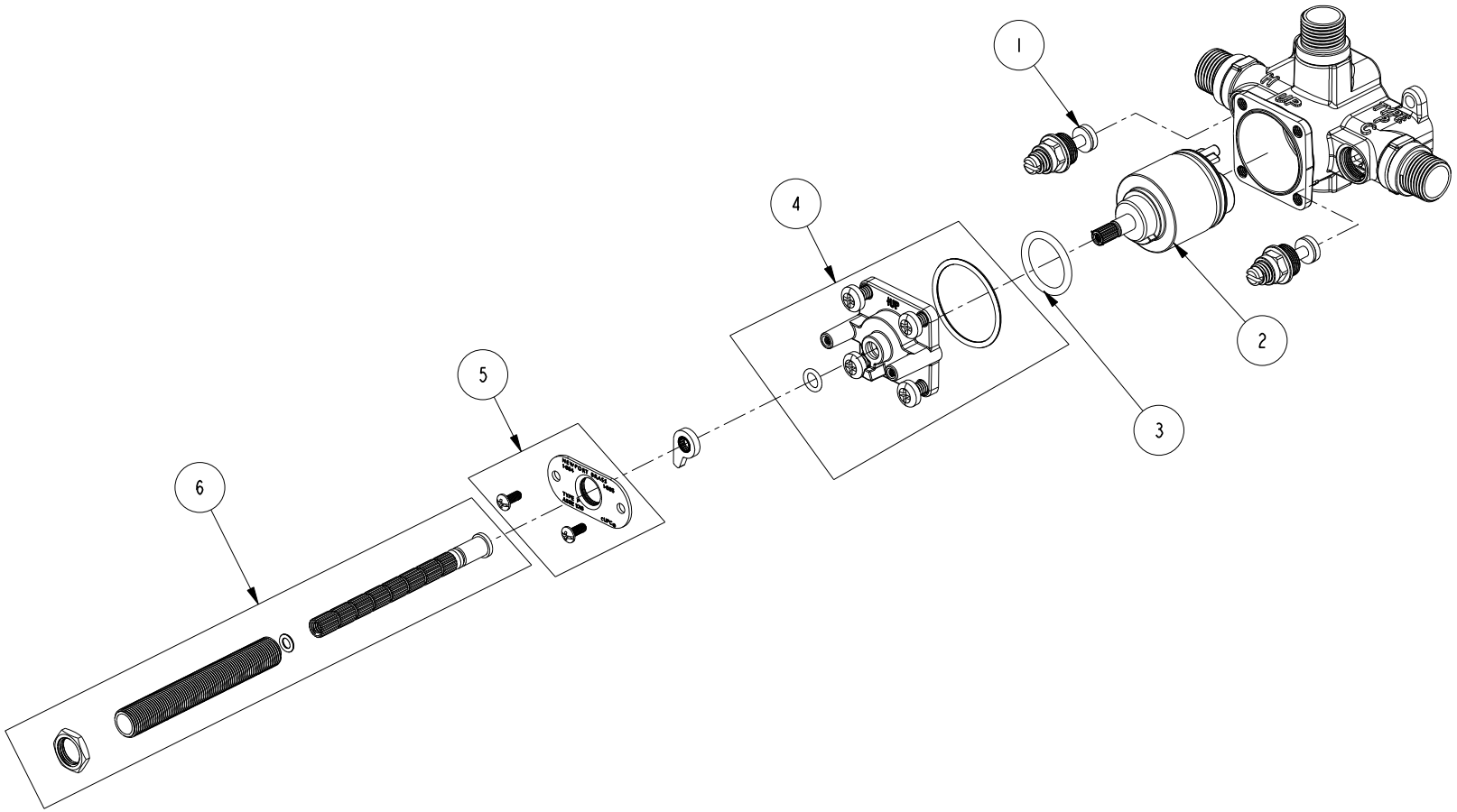

BP SHOWER TRIM VALVE
1-684

REV H EN-5086 01/23/26

NEWPORT BRASS

t: 949.417.5207 | www.newportbrass.com