NEWPORT BRASS

VALVES / MISC

BP TUB & SHOWER TRIM DIVERTER VALVE

1-685

Features

- Solid brass construction
- Provides anti-scald protection and temperature regulation
- Pressure-balance technology maintains water temp. within +/- 3 degrees Fahrenheit
- High-temperature safety stop to control maximum temperature
- Integrated hot and cold inlet stops ensure easy cartridge access
- 1-1/16" functional depth (center-back) enables back-to-back installation
- Maximum handle rotational requirement of 150 degrees to achieve max temp setting
- Require Newport Brass BP valve trim (sold separately)

Codes / Standards Compliance

Meets or exceeds the following at date of manufacture:

- ASME A112.18.1/CSA B125.1
- IAPMO/cUPC
- IPC
- ASSE 1016/ASME A112.1016
- All applicable US Federal and State material regulations

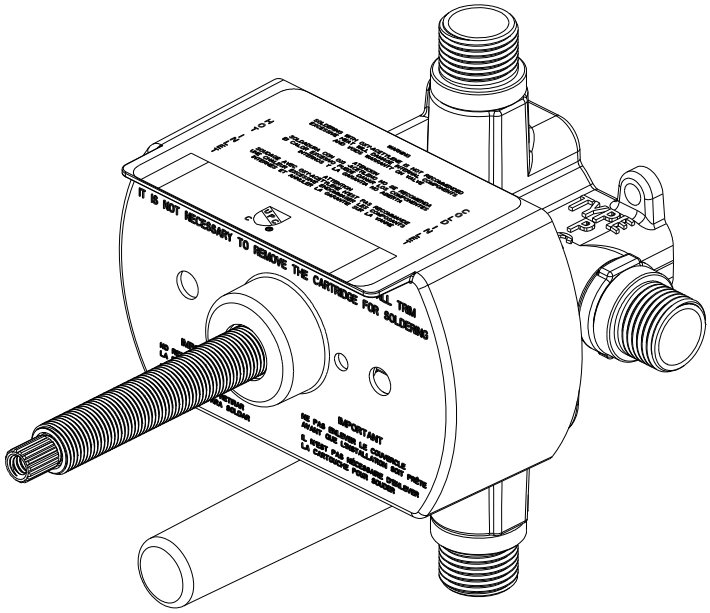

t: 949.417.5207 | www.newportbrass.com

NEWPORT BRASS

PRODUCT DIMENSIONS *(Units are in inches)*

Product Dimensions are provided for reference only. For specific product installation guidelines, please reference the Installation Instructions of the product being installed.

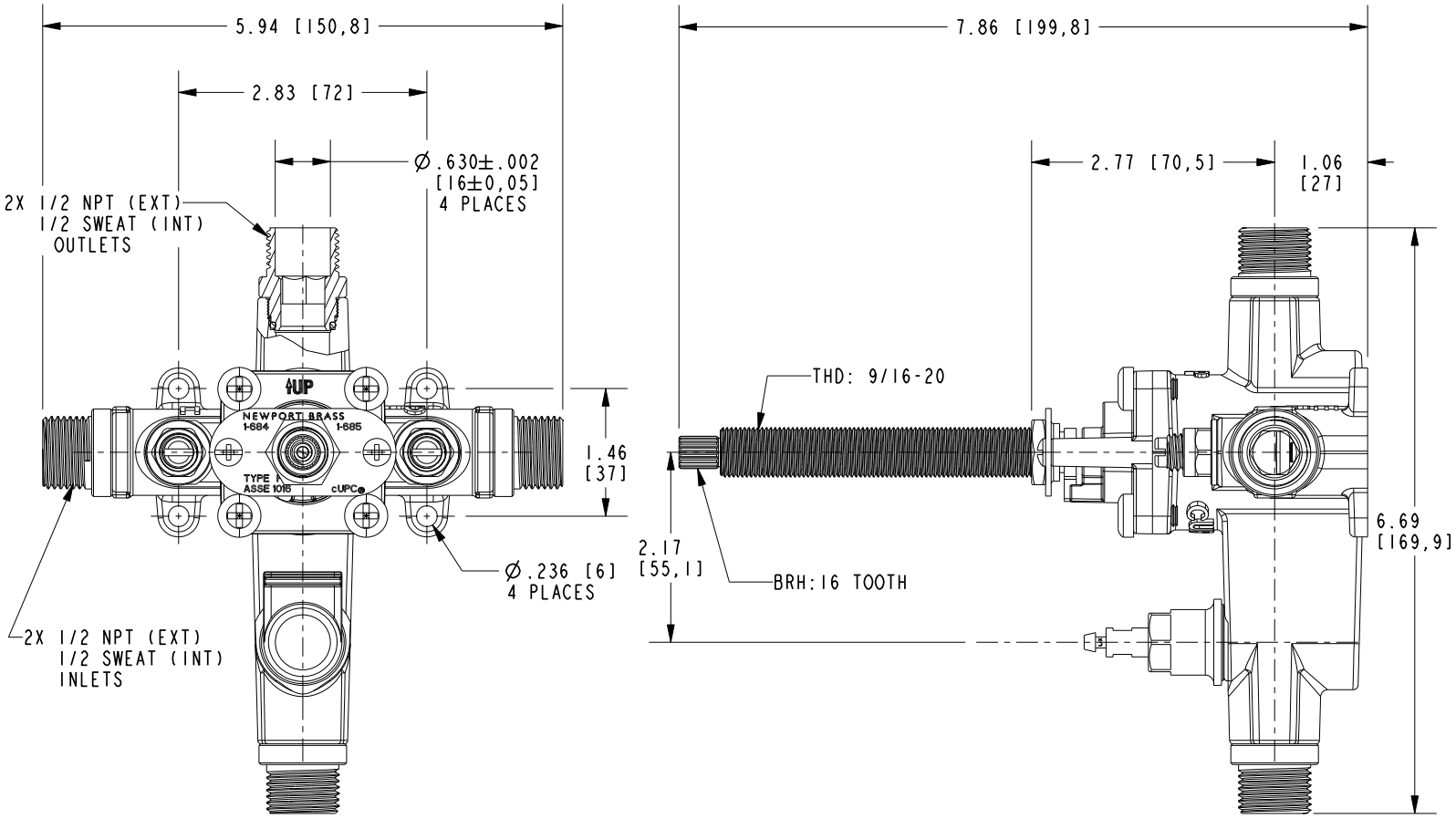

(MUD COVER HIDDEN IN ALL VIEWS)

BP TUB & SHOWER TRIM DIVERTER VALVE

1-685

Newport Brass reserves the right (1) to make changes in specifications and materials, and (2) to change or discontinue models, both without notice or obligation. See current full-line price book or www.newportbrass.com for finish options and product availability.