Owners Manual

Models 4420BF1UDBFR* and 4420BF1LDBFR*
Bi-Level Tubular Bottle Filler Fountain with Pet Fountain and Sanitary Freeze Resistant Triple Valve Control Assembly

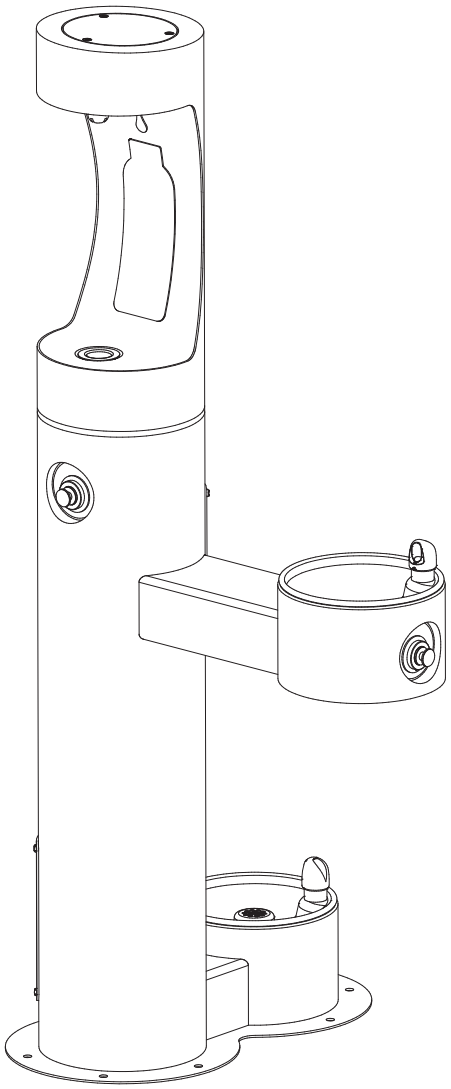

MODEL (LK)4420BF1UDBFR

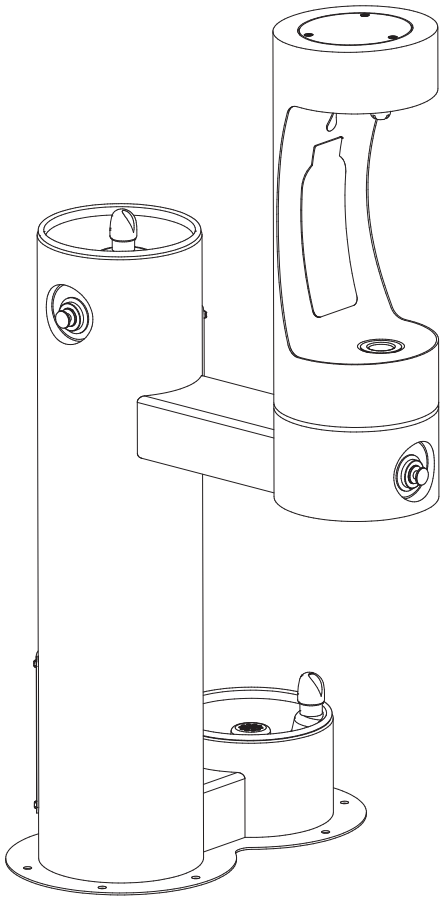

MODEL (LK)4420BF1LDBFR

INSTALLER

4420BFDBFR Fountains are among the easiest to install Fountains on the market today. To assure you install these models easily and correctly, PLEASE READ THESE SIMPLE INSTRUCTIONS BEFORE STARTING THE INSTALLATION. CHECK YOUR INSTALLATION FOR COMPLIANCE WITH PLUMBING, ELECTRICAL, AND OTHER APPLICABLE CODES. After installation, save these instructions for future reference.

INSTALLATION INSTRUCTIONS

IMPORTANT

ALL SERVICE TO BE PERFORMED BY AN AUTHORIZED SERVICE PERSON

IMPORTANT! INSTALLER PLEASE NOTE.

THE GROUNDING OF ELECTRICAL EQUIPMENT SUCH AS TELEPHONE, COMPUTERS, ETC. TO WATER LINES IS A COMMON PROCEDURE. THIS GROUNDING MAY BE IN THE BUILDING OR MAY OCCUR AWAY FROM THE BUILDING. THIS GROUNDING CAN CAUSE ELECTRICAL FEEDBACK INTO A FOUNTAIN, CREATING AN ELECTROLYSIS WHICH CAUSES A METALLIC TASTE OR AN INCREASE IN THE METAL CONTENT OF THE WATER. THIS CONDITION IS AVOIDABLE BY USING THE PROPER MATERIALS AS INDICATED. ANY DRAIN FITTINGS PROVIDED BY THE INSTALLER SHOULD BE MADE OF PLASTIC TO ELECTRICALLY ISOLATE THE FOUNTAIN FROM THE BUILDING PLUMBING SYSTEM.

IMPORTANT! INSTALLER PLEASE NOTE

* For freeze resistant valve to function properly, the valve must be installed in a non-freezing area or below frost line.
* Tubing must be cut to right length. Do not coil any excess tubing or it will cause the valve to malfunction.
* Do not pull up on lines coming out of the PVC column. This raises the water valve above the frost line. Use the nylon strap (ref. Item 10) to lift the unit to prevent damage to the valve.

General Installation Tips

1. Be sure to flush water supply line before you connect it to the inlet fitting on Freeze Resistant Valve System.
2. There is one combined drain line required for this unit that is for the drinking fountain basin and/or bottle filler drains and the valve/water supply line system. The bowl drain is the 1-1/2" PVC fitting at the bottom of the 8" PVC tube and the valve drains back up to the bowl drain through the air gap assembly (provided). Provide ample drainage. It's always better to have too much than not enough.
3. The column (8" PVC tube) must remain vertical. Be sure it remains vertical when backfilling the excavating trench.
4. When the concrete pad, for mounting the fountain is poured, be sure to allow adequate space around the top of the column for servicing the valve.
5. We recommend that the top of the column be flush or slightly above the top height of the concrete pad.
6. You should test the unit before you backfill. Simply blow on the clear, small diameter tubing. A steady stream should flow from the braided tubing line. When air pressure is removed from the clear tubing the water stream should stop.
7. Once you have tested the valve, backfilled the hole and poured the concrete mounting pad you are ready to set the fountain. After bolting the fountain in place connect the air control valve tubing, supply water tubing and drain lines. The water supply line must have a straight run from the basin bubbler down to the control valve. If a straight run is not maintained water will become trapped and freeze leaving the unit inoperable. Test the fountain again. If it fails to work, the air control line may be kinked or connected improperly. Be sure to keep water out of the air control line.
8. These products are designed to operate on 20 PSI to 105 PSI supply line pressure. If inlet pressure above 105 PSI, a pressure regulator must be installed in the supply line. Any damage caused by reason of connecting this product to supply line pressure lower than 20 PSI or higher than 105 PSI is not covered by warranty.

INSTALLATION INSTRUCTIONS FOR INSTALLING SANITARY FREEZE TRIPLE VALVE CONTROL ASSY.

1. Prepare trench for water supply and waste drain lines (if required by local codes). The hole should be deep enough to accommodate the PVC column and 5 cubic feet of porous fill (large broken rock). Additional porous fill may be required due to local ground conditions. (See Site Preparation Detail below).
2. Lay drain lines and water supply lines. Provide service shut off valve for maintenance. Flush the water supply line before attaching to the shut off valve.
3. Set PVC column in excavating pit. Connect the water supply line to the inlet on the PVC column. Remove valve assembly from the PVC column by carefully pulling up on the nylon strap. Pressure test the valve assembly for leaks. Check operation of the water valve by blowing on the small clear diameter tubing. A steady stream of water should flow from the braided tubing. After releasing air pressure from the small clear tubing the water stream should stop.
4. Replace the water valve into the PVC column. Make sure the supply hose coils into the bottom of the PVC column without any kinks. Cap the PVC column, protect the ends of the connecting tubes and backfill the trench. Keep the PVC column vertical at all times.
5. Form the concrete mounting pad and locate the fountain 3/8" minimum fasteners (not included) in the proper position. (Refer to Rough-in for correct location of fasteners.) (Fasteners not included). Pour concrete and finish. Be sure to keep concrete away from the top of the PVC column to allow removal of PVC cap to allow for future service. Let concrete set 4 hours minimum before mounting fountain.
6. Double check that the water valve is positioned fully at the bottom of the PVC column. Install insulation into the PVC column and push down onto the top of the water valve.
7. Mount the fountain onto the 3/8" minimum fasteners. (Fasteners not included). Level and shim fountain as required.
8. Connect the drain line, water line and air control lines. Excess lengths should be trimmed from the tubing. The water supply line must be positioned for positive drain back out of the fountain and down through the water valve. **Any water allowed to be trapped above the frost line will freeze leaving the unit inoperable.** Do not pull up on the connection lines as this could raise the valve above the frost line.
9. Check for proper operation by using fountain push buttons. If the valve does not work properly check for leaks or kinks in the air control line.
10. After insuring proper operation reassemble fountain. Installation of your fountain is now complete.

SUGGESTED SITE PREPARATION DETAIL FOR THE SANITARYFR3 VALVE

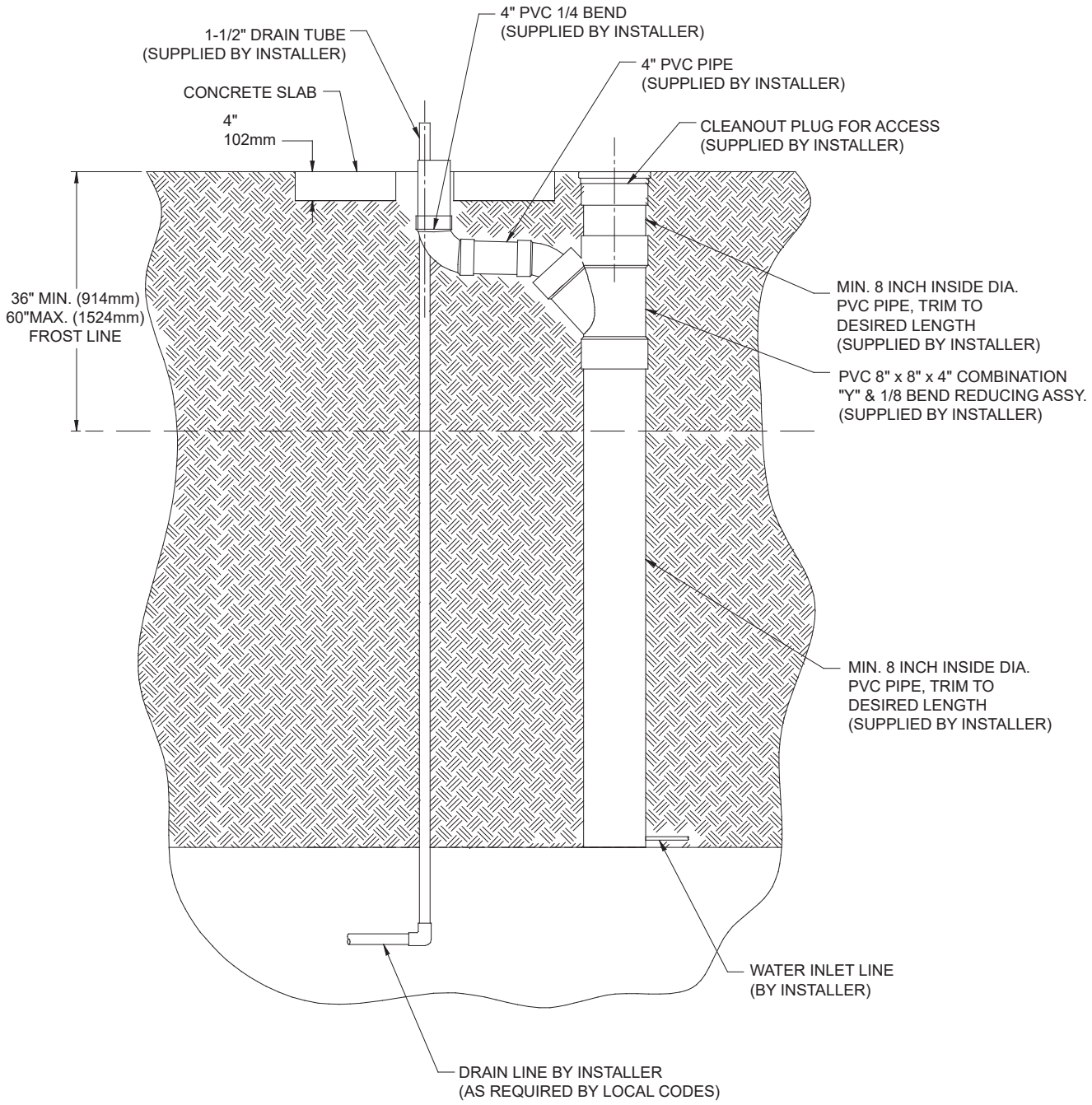

FIG. 1

SUGGESTED SITE PREPARATION DETAIL FOR THE 4420DBBFF1UFR FTN. WHEN USING THE SANITARYFR3 VALVE

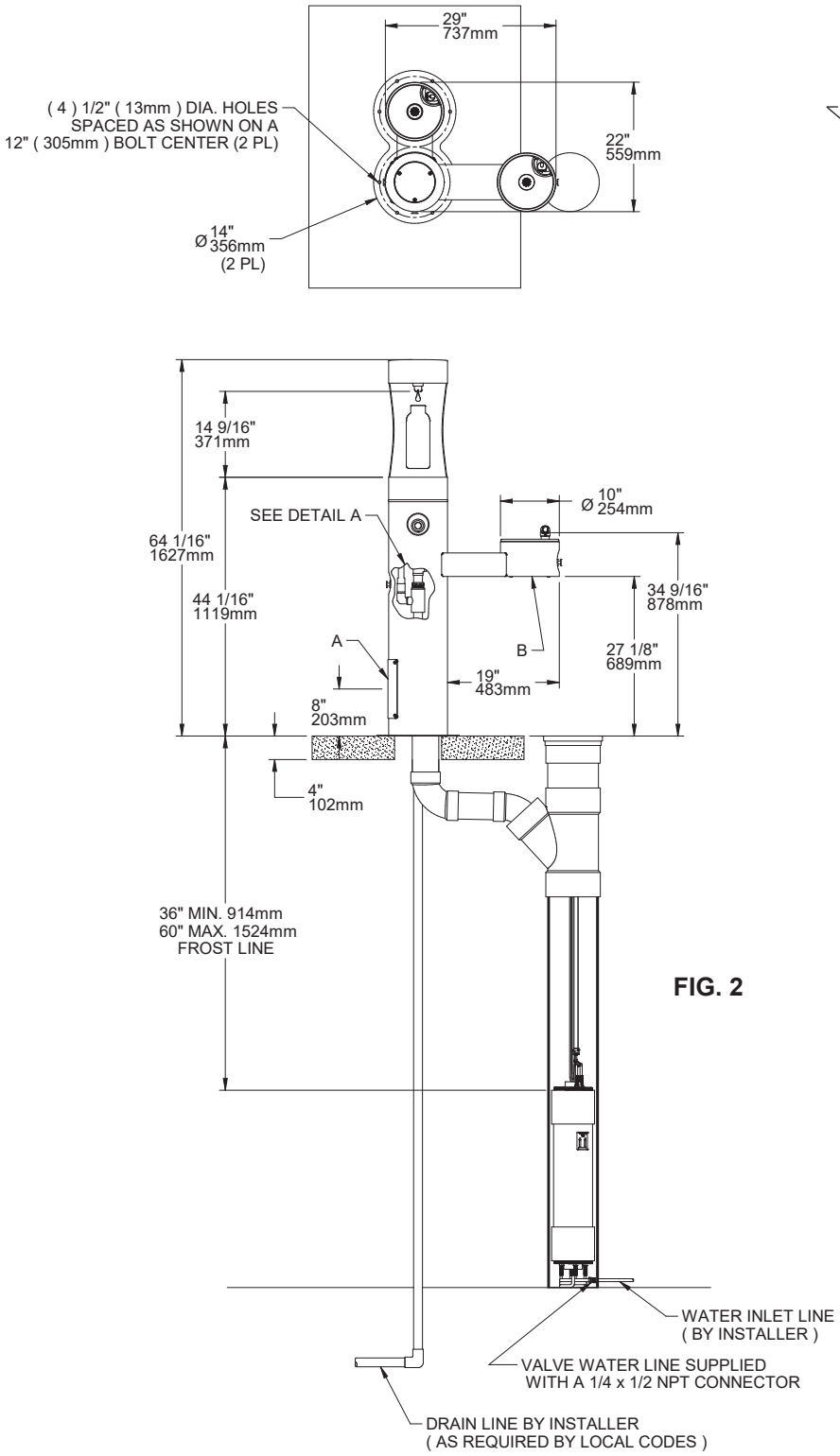

FIG. 2

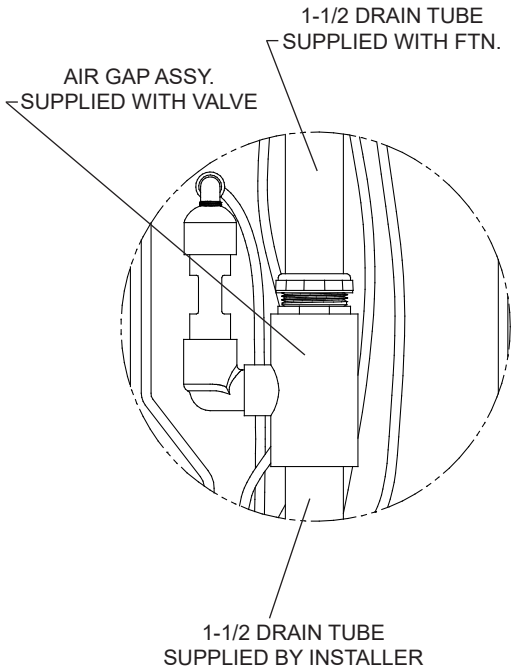

Detail A

LEGEND
A = ACCESS PANEL (8" X 10")
MAXIMUM WATER SUPPLY PRESSURE: 105 PSI (0.73 MPa)
B = REMOVABLE BOTTOM COVER

SUGGESTED SITE PREPARATION DETAIL FOR THE 4420DBBFF1LFR FTN. WHEN USING THE SANITARYFR3 VALVE

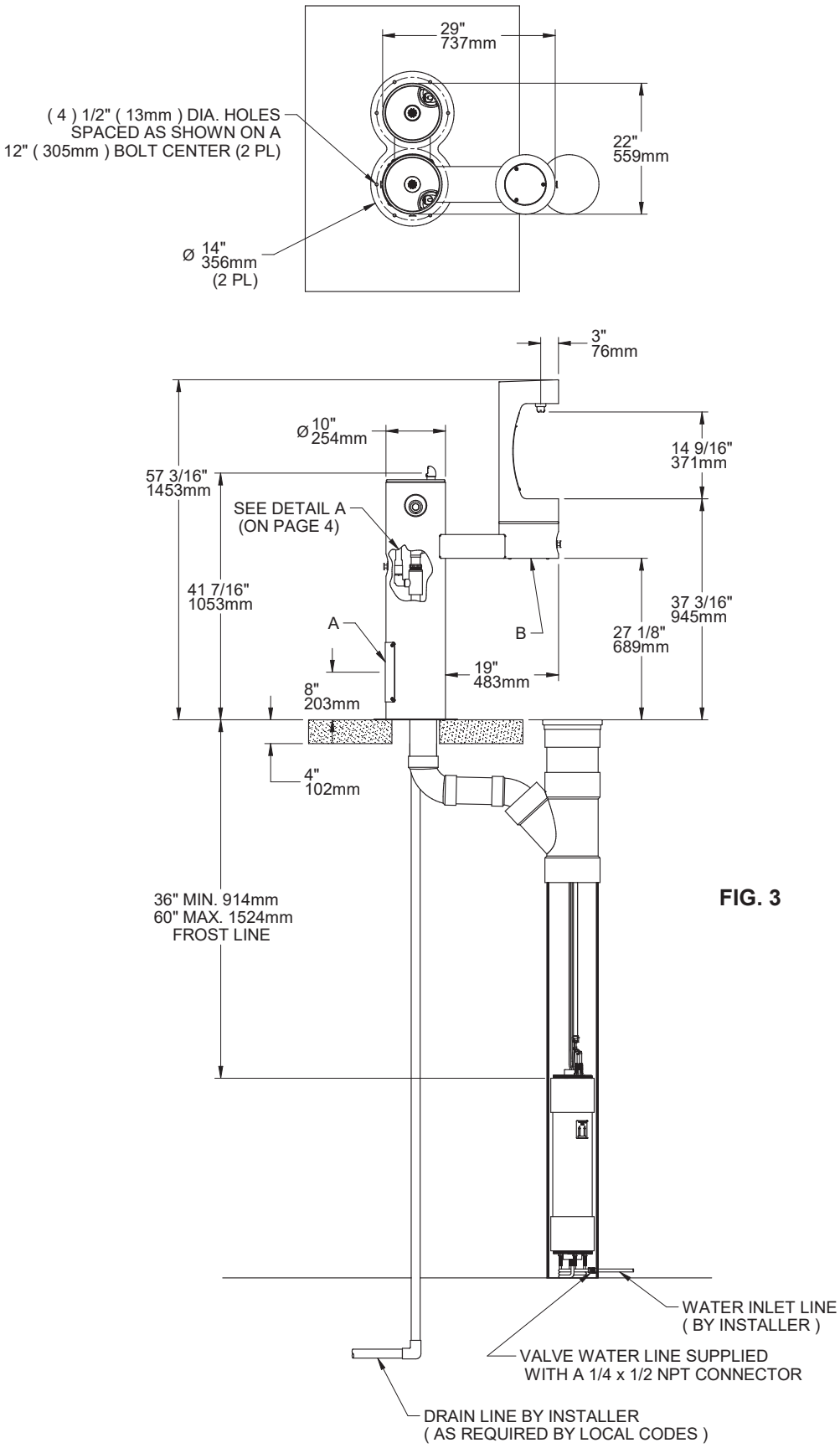

FIG. 3

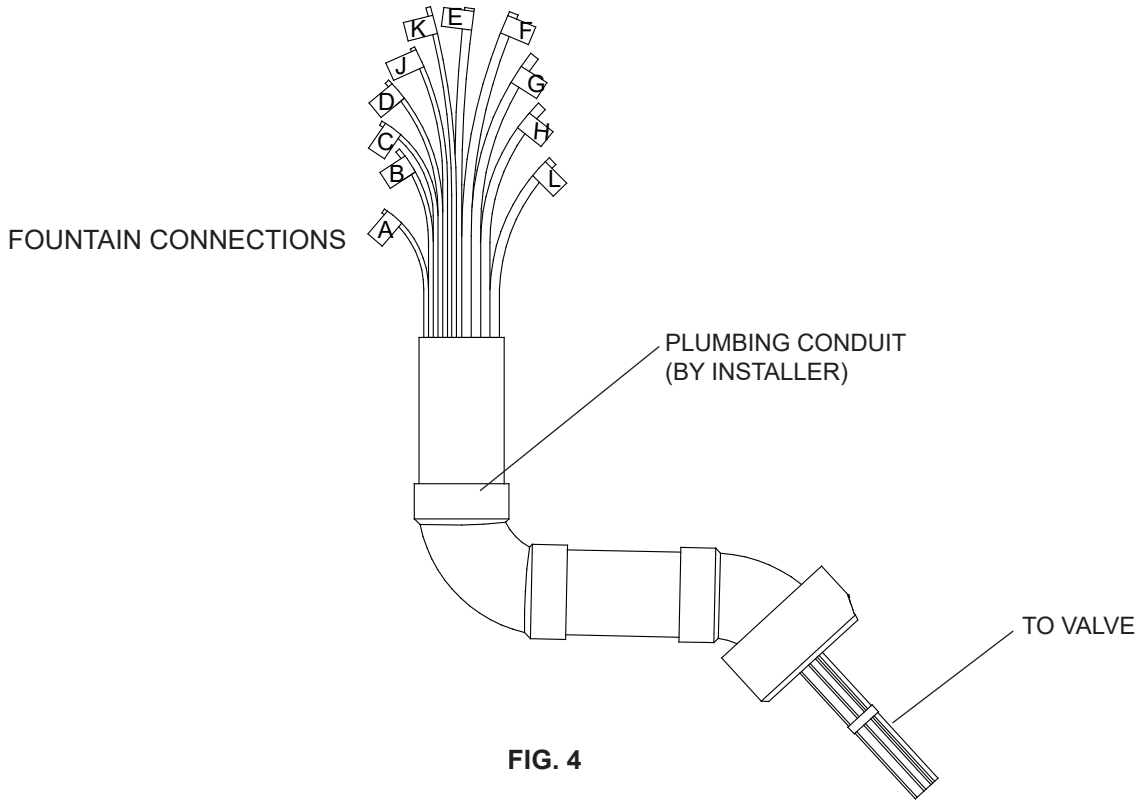

FIG. 4

INSTRUCTIONS FOR CONNECTING TUBES FROM VALVE TO FOUNTAIN(S)

Step 1 - Insert the 1/8” O.D. tube(s) (Labeled A, B & J) into the connector(s) (provided with fountain). Insert the 1/8” O.D. tube(s) coming from the fountain(s) push button actuator(s) into the connector(s). Trim any excess length.

Step 2 - Secure the 1/8” O.D. tube(s) (Labeled C, D & K) to the waste line assembly. This line is a vent line and should be open to the air.

Step 3 - Insert the 1/4” O.D. tube(s) (Labeled E, F & L) into the 1/4” union(s) (provided with valve assembly). Insert the 1/4” O.D. water lines coming from the fountain(s) into union(s). Trim any excess length.

Step 4 - Insert the 1/4” O.D. tube (Labeled G) into the air gap assembly.

Step 5 - Secure the 1/4” O.D. tube (Labeled H) to the waste line assembly. This line is a vent line and should be open to the air.

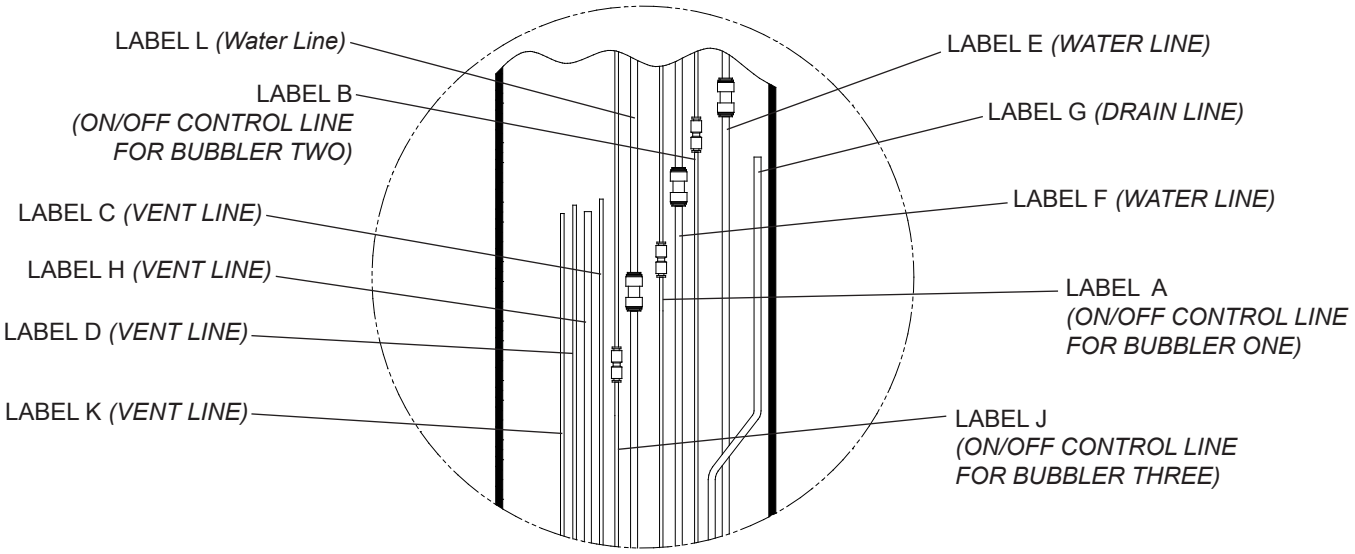

FOUNTAIN CONNECTIONS

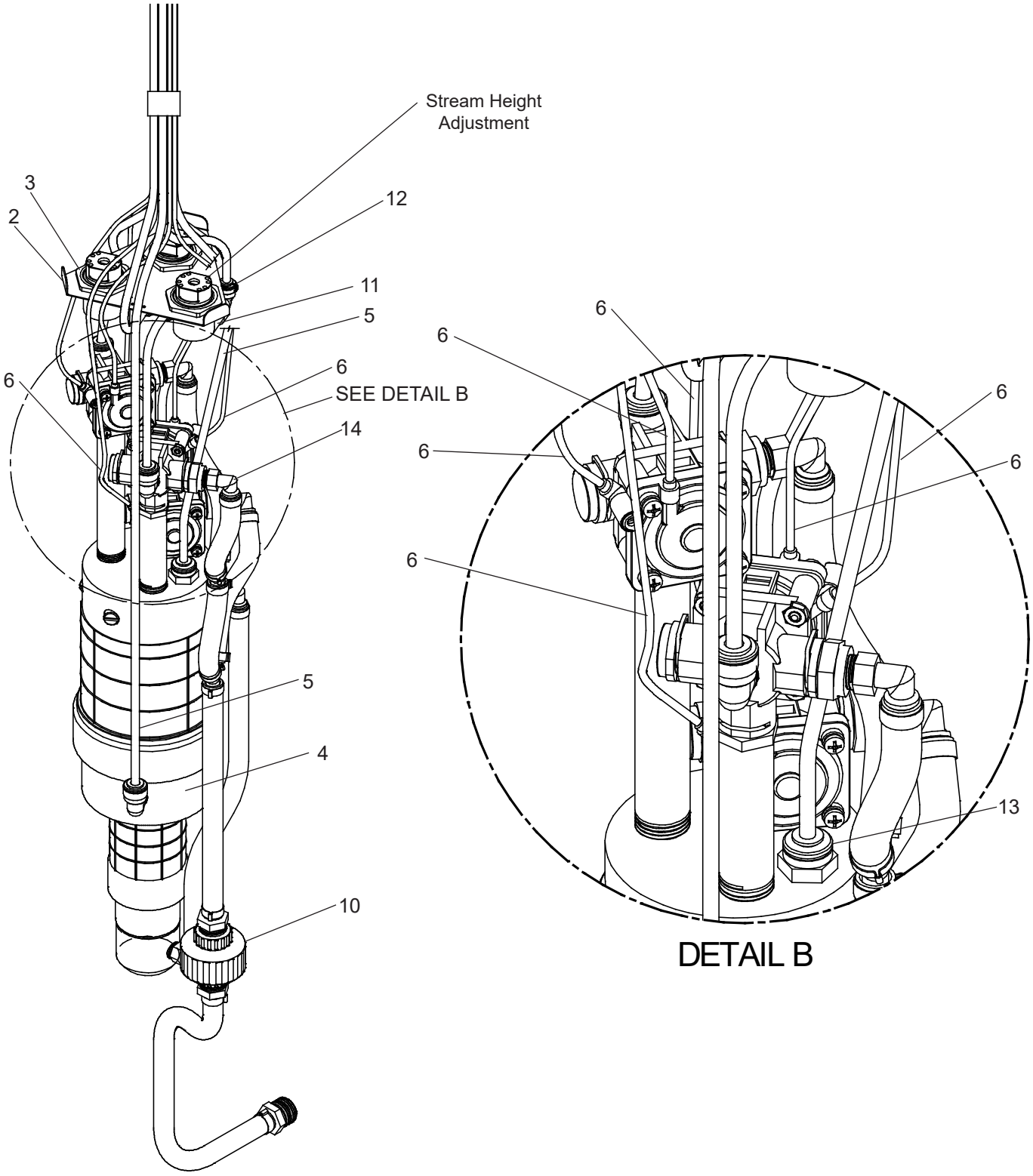
Stream Height
Adjustment
3
2
12
11
5
6
6
SEE DETAIL B
14
5
4
10
6
6
6
6
6
6
13
DETAIL B

FIG. 5

The Following Items are included with the SanitaryFR3 Valve

PARTS LIST		
ITEM NO.	PART NO.	DESCRIPTION
1	110175443890	Hex Nut - 3/8-16
2	1000003964	Bracket - Regulator Mtg (Serv)
3	40045C	Hex Nut - 1-5/16
4	1000003963	Triple Valve
5	56092C	Poly Tubing - 1/4” (Cut To Length)
6	56123C	Poly Tubing - 1/8” (Cut To Length)
7	56185C	Canister
8	75653C	Nylon Strap - 6 ft.
9	1000003970	Kit - Air Gap Assy.
10	56218C	Fitting - 1/2” Union w/Strainer
11	98678C	Kit - 1.0 GPM Regulator
12	70817C	Fitting - Elbow 1/4 Stem x 1/4 Tube
13	70828C	Fitting - Connector 1/4 x 1/4 NPTF
14	75639C	Fitting - Elbow 1/4 x 1/4 NPTF
15	75652C	U-Bolt
NS	70683C	Fitting - Union 1/4

NS = Not Shown

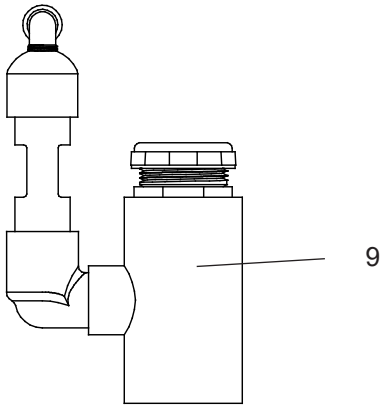

FIG. 6

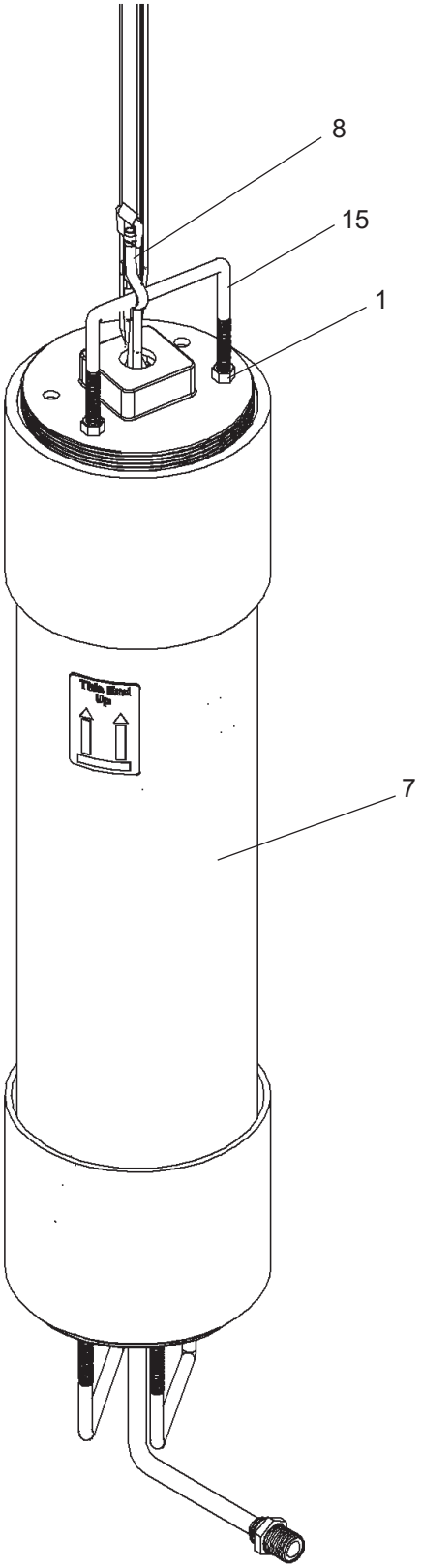

FIG. 7

INSTALLATION INSTRUCTIONS

IMPORTANT

ALL SERVICE TO BE PERFORMED BY AN AUTHORIZED SERVICE PERSON

IMPORTANT! INSTALLER PLEASE NOTE.

THE GROUNDING OF ELECTRICAL EQUIPMENT SUCH AS TELEPHONE, COMPUTERS, ETC. TO WATER LINES IS A COMMON PROCEDURE. THIS GROUNDING MAY BE IN THE BUILDING OR MAY OCCUR AWAY FROM THE BUILDING. THIS GROUNDING CAN CAUSE ELECTRICAL FEEDBACK INTO A FOUNTAIN, CREATING AN ELECTROLYSIS WHICH CAUSES A METALLIC TASTE OR AN INCREASE IN THE METAL CONTENT OF THE WATER. THIS CONDITION IS AVOIDABLE BY USING THE PROPER MATERIALS AS INDICATED. ANY DRAIN FITTINGS PROVIDED BY THE INSTALLER SHOULD BE MADE OF PLASTIC TO ELECTRICALLY ISOLATE THE FOUNTAIN FROM THE BUILDING PLUMBING SYSTEM.

1. This fountain is to be mounted on a smooth, flat, finished surface with adequate support structure. NOTE: Mounting structure must be capable of supporting 300 lb. load on fountain.
2. Refer to rough-in for plumbing.
3. Install shut-off valve on water supply. (Valve not furnished)
4. Locate and install fountain using 3/8" minimum fasteners. (Fasteners not furnished)
5. Prior to installing the bottle filler to the center mounting position of fountain, install the drain pipe (Item #40) by positioning the short end of drain pipe through mounting plate of bottle filler. Next, place the aesthetic collar (Item # 46) onto the center mounting position of the fountain ensuring the vertical edge of the collar is upright and the curved edge sits below the mount ing surface. Mount bottle filler to fountain with collar centered between the two pieces. Secure with supplied hardware.
6. Prior to installing the bottle filler to the arm mount of fountain, insert the drain pipe (Item #44) into the arm tunnel and adjust drain to lean to the left side of arm when facing button. place the aesthetic collar (Item # 46) onto the arm mounting position of the fountain ensuring the vertical edge of the collar is upright and the curved edge sits below the mounting surface. Mount bottle filler to arm with collar centered between the two pieces Install bottle filler to arm being sure drain tube is above mounting plate of filler. Install filler onto fountain and secure with supplied mounting hardware.
7. Connect water supply and fountain drain. Connect drain waste "Tee" to fountain drain tubes. Connect outlet of "Tee" to drainage system. Connect fountain water line to freeze valve supply line as specified in above sections. Water connection and drain must comply with local codes.
8. Turn on water supply and check all connections for leaks.

CAUTION: This fountain is rated for inlet water pressure of 20-105 PSI. A pressure reducing regulator should be used if the inlet water supply exceeds 105 PSI. Any damage caused by reason of connecting this product to supply line pressures lower than 20 PSI or higher than 105 PSI is not covered by warranty.

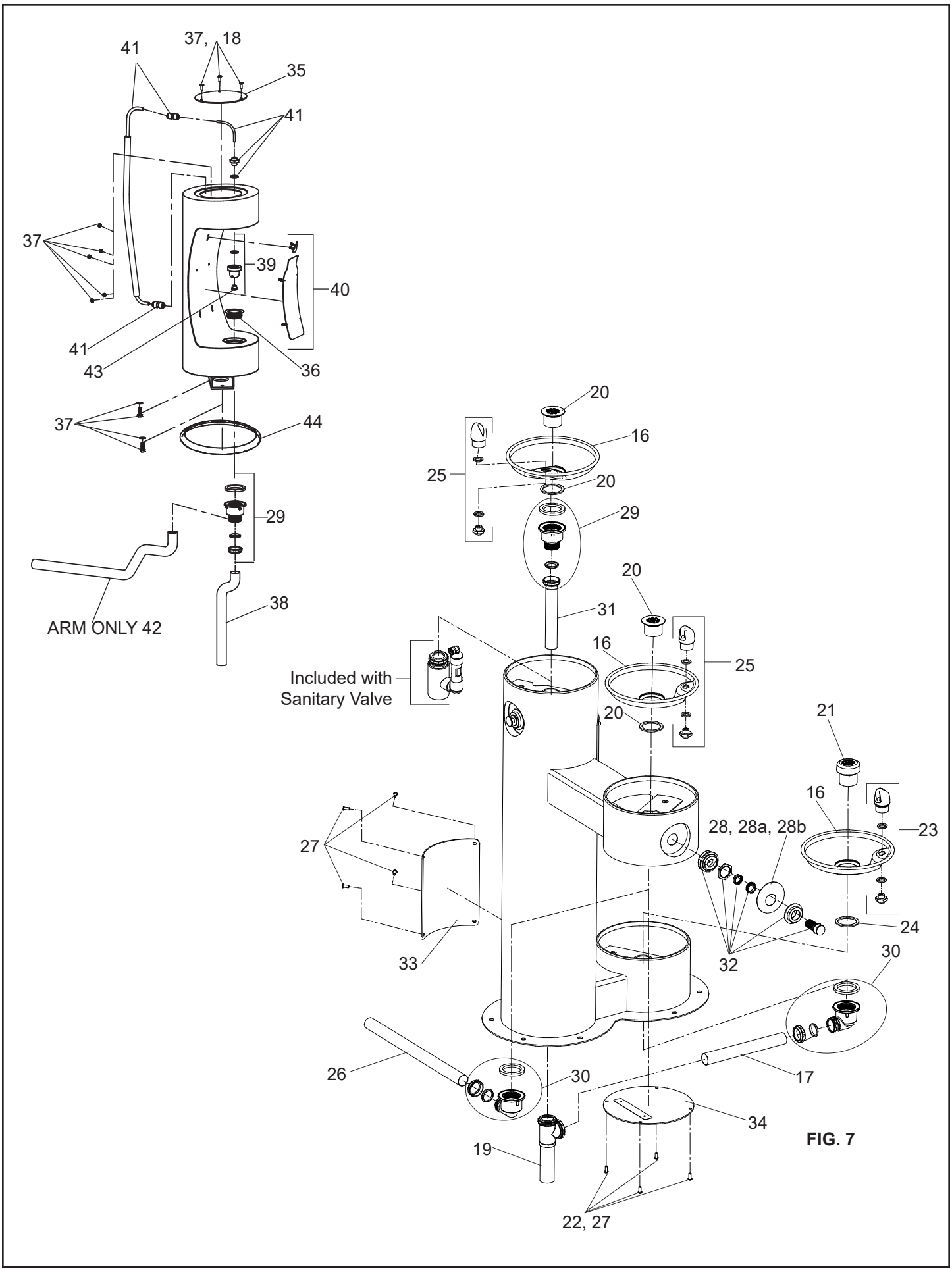
41
37, 18
35
41
37
39
40
41
43
36
37
44
29
ARM ONLY 42
38
20
16
25
20
29
20
31
16
25
Included with
Sanitary Valve
20
21
16
23
28, 28a, 28b
27
24
33
32
30
26
30
17
34
19
22, 27

FIG. 7

TROUBLESHOOTING AND MAINTENANCE

Troubleshooting

Insufficient Bubbler Flow: Check that the shut-off valve is wide open. Verify minimum 20 PSI supply pressure. Clean inlet strainer screen located in the valve body. Clean rubber orifice in flow control located below frost line in bushing between barb fitting and valve.

No Flow: Check for leaks in the air tubing going from the push button to the valve. Make sure the air tubing compression nut is hand tight. Disconnect air tube from push button. Place finger over air outlet. Push button to test diaphragm. Tighten diaphragm cap screws. Replace diaphragm if necessary.

Continued Insufficient or Varied Height of Bubbler Flow:

- Check for kinks in the tubing.
- Remove the valve assembly from the PVC column by carefully pulling up on the strap and connecting tubing at the same time. Check stream height from the bubbler. Stream height is factory set at 35 PSI. If supply pressure varies greatly from this, adjust the screw on the regulator (Item 13, Fig. 5, Page 7). Clockwise adjustment will raise stream and counter-clockwise adjustment will lower stream. For best adjustment stream height should be approximately. 1-1/2" (38mm) above the bubbler guard. Replace the valve into the PVC column. Make sure the supply hose coils into the bottom of the PVC column without any kinks and double check that the valve is positioned fully at the bottom of the PVC column.

Continuous Bubbler Flow: Insure that push button is not obstructed and springs back to normal position. Remove four screws which secure plastic diaphragm block to valve body. Pull plastic and rubber diaphragm assembly out of valve body. Locate tiny hole in rubber diaphragm just under lip of plastic part. Clean debris from this hole. Inspect valve seat for grooves. If valve seat was OK and diaphragm hole was free from debris, inspect rubber button located at center of floating steel disc in valve diaphragm block assembly. If button is worn, turn disc over or replace it. If diaphragm and seats are in good condition, stretch spring slightly. Spring is located behind floating stainless steel plate. Insure that air bleed port on valve plastic block assembly is not plugged.

The following items are included with the 4420DBBFFR Fountain

PARTS LIST

ITEM NO.	PART NO.	DESCRIPTION
16	28467C	Basin
17	45724C	Tailpipe - 10" Lg.
18	75724C	Pinned Torx Screw - 1/4-20 x 3/4"
19	45476C	Tube - Drain
20	0000000325	Kit - Drain Plug/Gasket
21	45726C	Plug - Drain (Dog Bowl)
22	98685C	Kit - Hardware/Bolts/Nuts/Washers/Torx Screws
23	0000000466	Kit - Bubbler (Dog Bowl)
24	101570540560	Gasket
25	97446C	Kit - VR Bubbler
26	66346C	Tube - Drain
27	97247C	Kit - VR Torx Screws/Bit
28	28703C	Blank Nameplate Insert (only)
28a	28703C-LK	LK4420BFFR Nameplate Insert (only)
28b	28091C-HT	4420BFFR Nameplate Insert (only)
29	98683C	Kit - Plastic Drain
30	98684C	Kit - 90° Plastic Drain
31	40551C	Tailpipe - 1-1/4" X 6-7/8"
32	98901C	Kit - FR Push Button/Sleeve/Nuts
33	1000003812*	Panel - Access
34	1000003813*	Cover - Bottom
35	1000003814*	Cover - Round Plate (BF)
36	45931C	Plug - Outdoor Bottle Filler Drain
37	98685C	Kit - Hardware/Bolts/Nuts/Washers/Torx Screws
38	66815C	Tube - Drain
39	98679C	Kit - Nozzle/Aerator
40	98681C	Kit - Blank Bottle Filler Trim
	1000003692	Kit - LK4420DBBFFR Bottle Filler Trim
	1000003693	Kit - 4420DBBFFR Bottle Filler Trim
41	98686C	Kit - Bottle Filler Waterway
42	66816C	Tube - Drain (Arm only)
43	98680C	Kit - Aerator/Key
44	1000005456	Aesthetic Collar
NS	75565C	Fitting - Double Male Connector
NS	56092C	Poly Tubing - 1/4" (Cut To Length) - To Bubbler
NS	56123C	Poly Tubing - 1/8" (Cut To Length) - To Actuator

NS = Not Shown

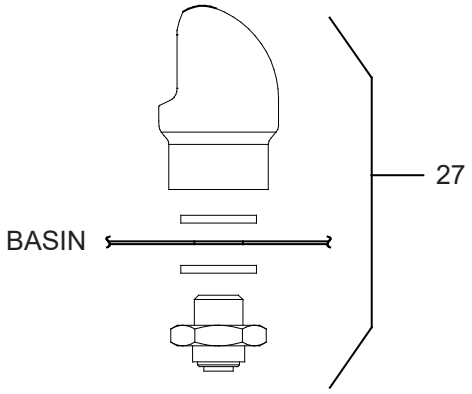

Vandal-Resistant Bubbler Detail FIG. 8

*select color option to complete part number

FINISH COLOR OPTIONS** – Choose color option to complete your model number, add as suffix example: 4420DBBFFRK**EVG

Matte finish: ☐ Evergreen = **EVG**

Gloss finish:

☐ Beige = **BGE** ☐ Gray = **GRY** ☐ Terracotta = **TER**
☐ Black = **BLK** ☐ Orange = **ORN** ☐ White = **WHT**
☐ Blue = **BLU** ☐ Purple = **PUR** ☐ Yellow = **YLW**
☐ Brown = **BRN** ☐ Red = **RED**

1000003949

Patent zurnelkay.com/patents

PRINTED IN U.S.A.

FOR PARTS, CONTACT YOUR LOCAL DISTRIBUTOR OR CALL 1.800.834.4816

REPAIR SERVICE INFORMATION TOLL FREE NUMBER 1.800.260.6640

ELKAY MANUFACTURING CO. • 1333 BUTTERFIELD ROAD SUITE 200 • DOWNERS GROVE • IL 60515 • USA 630.574.8484 • www.elkay.com