Claude™ by Studio McGee | K-39305

24" bathroom vanity cabinet with sink and quartz top

Features

- Designed in collaboration with Studio McGee
- Set includes cabinet, precut quartz vanity top, backsplash, sink, cabinet hardware
- Convenient tip-out drawer for storing smaller, frequently used items
- Three-way adjustable soft-close door hinges for easy cabinet access
- 20-7/16" (519 mm) cabinet interior provides ample storage space
- Finish-matched cabinet interior offers generous clearance for plumbing
- Bianco Bella (GBB) quartz vanity top adds beauty and long-lasting durability
- Coordinates with Bianco Bella (GBB) quartz side splash (sold separately)
- Vanity top has single faucet hole with knock-out holes for optional 8" (203 mm) widespread faucet configuration
- Vibrant® Polished Nickel hardware included on White and Draper Oak vanities; Vibrant Brushed Moderne Brass hardware on White Oak vanities. Additional hardware finishes are available (sold separately)
- Includes optional finish-matched filler strip to close gap between vanity and wall if installed adjacent to wall
- Includes Claude by Studio McGee undermount sink in Dune



Available Colors/Finishes

Color tiles intended for reference only.

- 0 White
- SWK White Oak
- DAK Draper Oak

1-800-4KOHLER (1-800-456-4537)
Kohler Co. reserves the right to make revisions without notice to product specifications.
For the most current specification sheet, go to www.kohler.com USA or www.kohler.ca Canada.
8-08-2026 01:00 - US-CA

Codes/Standards

ASME A112.19.2/CSA B45.1
EPA TSCA Title VI/CARB P2

Technical Information

All product dimensions are nominal.

Lighting Included:	No
Number of Deck Holes:	3
Center(s):	8" (203 mm)

Material

- Quartz vanity top
- Vitreous china sink
- Solid and composite wood
- Wood is a living material, and its beauty is enhanced by natural variations in grain, color, and pattern. No two pieces of wood are exactly the same, and the color will change with age, temperature, and exposure to light

Warranty

See website for detailed warranty information.

KOHLER® One-Year Limited Warranty

1-800-4KOHLER (1-800-456-4537)
Kohler Co. reserves the right to make revisions without notice to product specifications.
For the most current specification sheet, go to www.kohler.com USA or www.kohler.ca Canada.
8-08-2026 01:00 - US-CA

THE BOLD LOOK OF KOHLER.

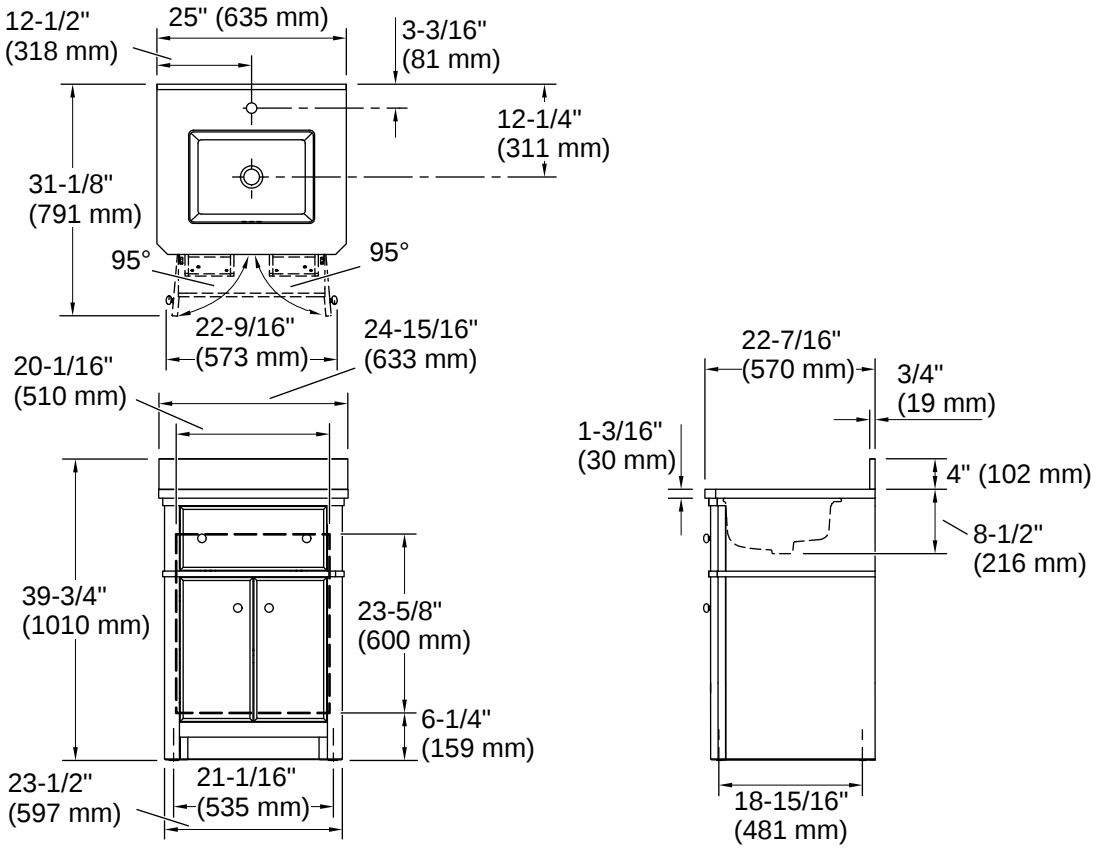

Installation

- Easy installation – no special tools required
- Sink preinstalled on vanity top to simplify installation

Installation Notes

Install this product according to the installation instructions.

Install this product in accordance with the installation instructions.
Select the type of fastener based upon the wall material. Two 250 lb (113.4 kg) minimum load bearing fasteners are recommended with a lag bolt of length to clear obstacles in the wall and 5/16" washers. Calculate the proper lag bolt length by adding the 1-1/2" (38 mm) backing material, plus the wallboard thickness, plus the back rail thickness.

1-800-4KOHLER (1-800-456-4537)
Kohler Co. reserves the right to make revisions without notice to product specifications.
For the most current specification sheet, go to www.kohler.com USA or www.kohler.ca Canada.
8-08-2026 01:00 - US-CA

THE BOLD LOOK OF KOHLER.