Brand	AXOR
Art. Name	**AXOR ShowerSolutions** Showerhead 245 1-Jet 1.5 GPM
Art. Nr.	35386671
Surface	Matte Black

Product Picture

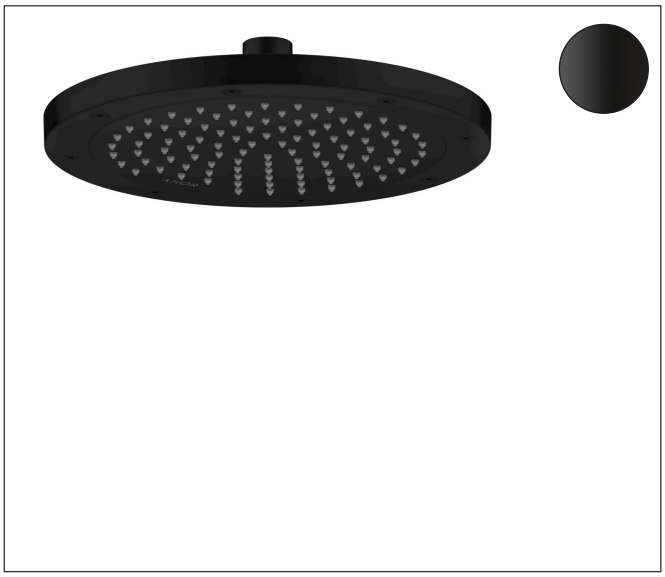

Drawing

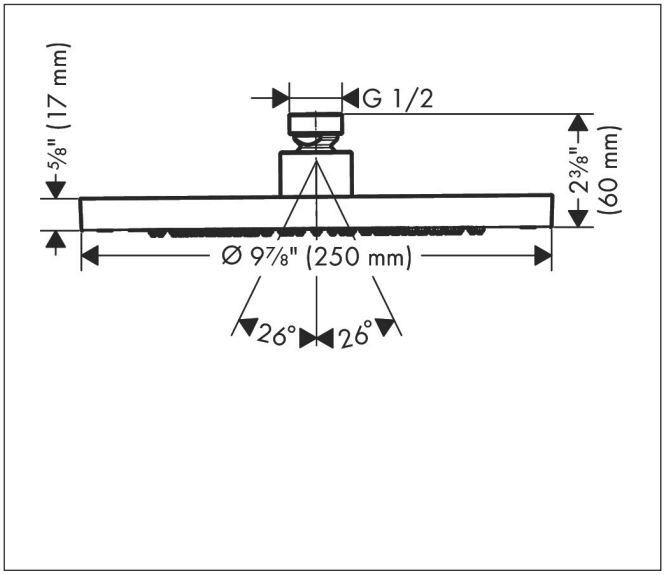

Features

- Showerhead size: 9 5/8”
- Spray type: Rain
- Max. flow rate: 1.5 GPM
- Showerhead removable for cleaning

Technology

EcoSmart EcoRight Quick Clean

Spray Types

Rain

Certicates/approvals

WaterSense Meets EPA Criteria Certified by IAPMO R&T

UPC C ®

Brand	AXOR
Art. Name	**AXOR ShowerSolutions** Showerhead 245 1-Jet 1.5 GPM
Art. Nr.	35386671
Surface	Matte Black

Required parts (choose one)

Product Picture	Art. Name	Art. Nr.
	AXOR Showerarm 15" Round	26431671
	AXOR Extension Pipe for Ceiling Mount, 4"	26432671
	AXOR Extension Pipe for Ceiling Mount, 12"	26433671
	AXOR Showerarm 9" Round	26435671